CURRENT ANTHROPOLOGY Vol. 17, No. 4, December 1976

On Natural Selection and the Inheritance of Wealth[1]

by John Hartung

WEALTH, for purposes of this paper, is meant to include any arbitrarily bestowable resource, ability, or status that might enhance the reproductive success of its possessor—that is, that subset of the "cultural stock" (Belshaw 1970) which an individual possesses and can exclusively transfer to other individuals as he chooses, for example, property rights, capital goods, heritable social status, or the tools and knowledge that facilitate their production.

It follows from the laws of natural selection that postreproductive adults can enhance their own reproductive success over time, or fitness, by endowing their offspring with whatever transferable wealth they have accumulated. Hamilton's (1964) measure of *inclusive fitness* indicates, as expected, that "giving behavior" will increase a *giver's* fitness in direct relation to his *coefficient of relationship* (Wright 1922) with the recipient. Accordingly, an individual will maximize the fitness-enhancing potential of his wealth if he transfers it to descendents who have inherited the highest concentration of his genes.

In addition to the coefficient of relationship between a giving ancestor and a receiving descendent, the *degree* to which the descendent's fitness can be enhanced by heritable wealth will determine the fitness advantage to be gained; i.e., among descendents having nearly equal coefficients of relationship with the ancestor in question, the fitness-enhancing potential of the wealth will be maximized if it is transferred to the descendent whose potential reproductive success is most dependent on such wealth.

Two reproductive phenomena, the first involving comparison of the reproductive variance among males with the reproductive variance among females and the second involving the mechanics of sex-chromosome transmission, form the foundation of a natural-selection basis for patrilineal inheritance. More precisely, consideration of these phenomena leads to the conclusion that the transmission of wealth along the male line, as opposed to the female line, maximizes the fitness-enhancing potential of the giver's wealth by concentrating it on descendents with higher coefficients of relationship and higher reproductive potential. In cases where the male line is difficult to establish, matrilineal inheritance or the special mother's brother–sister's son relationship may evolve as the most reproductively profitable inheritance strategy.

These theories are put forward as causal explanations, not as excuses or justifications. Nor are they posited as contradictory to the socially functional theories advanced by cultural anthropologists in this regard, since, as noted by Alexander (1974:330), "behavior that initially evolves because of one effect may acquire another function without losing the first." Few people would take issue with the assertion that discrimination in favor of males has been a characteristic of our species, and most, I hope, would agree that investigating the roots of this behavior is germane to improving it. Again, as noted by Alexander (1974:330), "to the extent that we continue to deny a relationship between man's reproductive history and his social behavior (and by extension the structure of his culture) we are simultaneously denying to ourselves the possibility of even defining these problems."

DIFFERENTIAL MALE-FEMALE REPRODUCTIVE VARIANCE

The evolution of human social and sexual behavior must be strongly influenced by the obvious, yet seldom cited, difference in reproductive potential between males and females. Since a male can impregnate on a relatively continuous basis throughout his reproductive years, while a female must invest over nine months of her reproductive period in each pregnancy, an individual male has the physiological potential to procreate hundreds of children in a lifetime, while an individual female is limited to a maximum of approximately 30 (of course, total female reproduction must equal total male reproduction). The key variable here is the frequency of multiple mates for males: a male's reproductive success can be greatly enhanced by mating with many females, whereas a female can only be impregnated approximately once per year, regardless of the number of her mates.

The difference in reproductive variance within each sex (i.e., the between-sex difference of within-sex variance) is the foundation of sexual selection (Darwin 1859, 1871), but has only recently been measured in human populations (Meggitt

[1] I thank William Davenport, Francis Johnston, and Solomon Katz (Department of Anthropology, University of Pennsylvania), Irven DeVore and Joseph Popp (Department of Anthropology, Harvard University), Robert Trivers (Department of Biology, Harvard University), and Richard Alexander (Museum of Zoology, University of Michigan) for their encouragement, edification, and time.

JOHN HARTUNG is a graduate student in anthropology at Harvard University (his mailing address: c/o American Academy of Arts and Sciences, 165 Allandale St., Jamaica Plain Station, Boston, Mass. 02130, U.S.A.). Born in 1947, he received his B.A. from the University of Pennsylvania in 1973. His research interest is human selection theory.

The present paper, submitted in final form 24 III 76, was sent for comment to 50 scholars. The responses are printed below and are followed by a reply by the author.

1965, Salzano 1967, Chagnon 1968, Chagnon et al. 1970, Johnston et al. 1969, MacCluer, Neel, and Chagnon 1971). This difference can be expected to exist in any polygynous society in accordance with the degree to which it is polygynous. Murdock's (1967) *Ethnographic Atlas* states that of 400 cultures surveyed, 314 were found to have polygynous marriages and only 81 were without sanctioned polygyny. For purposes of determining the likelihood of higher male reproductive variance, many of these 81 cultures without *sanctioned* polygyny must be taken into consideration, because significant amounts of unsanctioned or promiscuous mating and/or a high divorce rate can accomplish the same end. The assumption that wealth is a decisive parameter for securing multiple mates in polygynous cultures is supported by Textor's (1967: Statement 242/263) finding that cultures where marriage is monogamous tend to be those where wives are obtained relatively easily, while cultures where marriage is commonly or occasionally polygynous tend to be those where wives are obtained with difficulty.

The connection between differential male reproductive variance, inheritance, and fitness can be drawn through economic analogy. If offspring are viewed as an investment (Trivers 1972) which will determine fitness through succeeding generations, it can be seen that sons represent a higher-risk, higher-profit-potential investment than do daughters (since males have potentially higher reproductive variance). Accordingly, if wealth is viewed as an arbitrarily bestowable reproductive advantage, it follows that this wealth will most benefit the benefactor if it is given to male descendents, because it makes more sense to enhance a high-risk, high-profit investment than a low-risk, low-profit investment when the enhancement significantly increases the probability of success.[2] (Of course, this is a teleological perspective, and I do not mean to imply that parents calculate their fitness and act accordingly—only that those who act in the prescribed manner will gain a reproductive advantage.) Figure 1 represents a simplified model of this situation.[3]

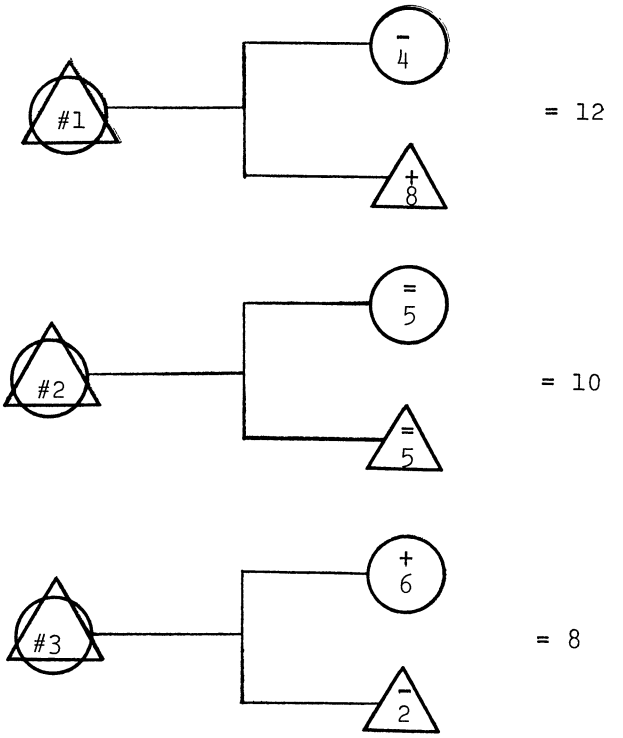

FIG. 1. A simplified model of the relationship between differential male reproductive variance, inheritance, and fitness. Given a society in which the standard deviation in number of offspring for males is 3, the standard deviation in number of offspring for females is 1, the mean number of offspring per male/female is 5, and the sole differentiating variable for number of offspring is the proportion of wealth inherited; and three couples, each with offspring as shown, where Couple 1 leaves all wealth to the son, Couple 2 divides wealth evenly, and Couple 3 leaves all wealth to the daughter; and assuming that inheritance permits the attainment of one standard deviation in number of offspring over others of the same sex and noninheritance results in a corresponding one-standard-deviation decrease, the total number of grandchildren for each couple will be as shown at right.

THE CHROMOSOMAL COROLLARY TO PATRILINEAGE

The traditional focus of sex-chromosome inheritance has been on the X chromosome; e.g., "sex-linkage" refers only to X-linkage (McKusick 1969). Among the reasons for the relative inattention to Y-chromosome inheritance are the facts that no variance can be accounted for through Y transmission (Hogben 1932) and that, with the exception of sex determiners and possibly "porcupine men," hairy ears, and the webbed-toe syndrome (Stern 1960), Y-linked genes are unmapped and are not subject to detection via the procedures applied to chromosomes that appear in homologous pairs. It should be kept in mind, however, that this lack of biochemical "markers" reflects the state of our knowledge rather than the importance or genetic integrity of the Y chromosome. The male-determining factor has been localized on the short arm of the Y chromosome (Krmpotic et al. 1972), and arguments have been advanced that the Y contains "a specialized form of genetic material related to nucleolar function" (Borrow, Pearson, and Collacott 1971). That the Y chromosome has behavioral significance can be inferred from its measurable dosage effect in XXYY and XYY males (Hook 1973).[4] Recent advances in karyotyping techniques (Yunis 1976) reveal that the human Y chromosome is much more complex than previously realized. Additional evidence for the behavioral importance of the mammalian Y chromosome comes from an elegant (by virtue of simplicity) experiment (Selmanoff et al. 1975) in which a significant difference in male aggressivity is found in two breeds of mice that vary only in the origin of their Y chromosomes.

As Alexander (1974:367) has said,

> Except for the particular eusocial insects in which new queens are never without workers, humans may be unique among all organisms in that under normal circumstances a human offspring is never entirely without parental care, even if it has itself become a grandparent; even if its parents are dead, it will only rarely be without some direct benefits of parental care since heritable resources include land, wealth, and privileges of many sorts.

In cases where heritable wealth is sufficient to influence reproductive success across several generations (e.g., fishing

[2] This effect would be further compounded if the first son were favored over other sons, since this would concentrate the inheritance and since the first son is first to reach reproductive age. The effect of concentrating the investment is noted by Alexander (1974:375): "When likelihood of genetic representation in some subsequent generation correlates most closely with ability to retain some heritable resource, such as a superior nest site, cavity, or structure (in eusocial insects), a superior territory (in birds or mammals) or farm (in Tibetan peasants), or even a royal title and the privileges accompanying it, dynasties may best be perpetuated (genetically as well as otherwise) by high investments in small numbers of offspring."

[3] Trivers and Willard (1973) have brought evidence to bear on their theory that nonhuman mammals can differentially favor male offspring in the utilization of environmental wealth—not by dispersing it to males, but by skewing their offspring sex ratio so that males are born during times of abundance and females in lean times.

[4] Other interpretations of XYY data are numerous and worthy. Most are at least referenced in Hook's review.

rights at a lucrative section of stream or capital holdings that generate significant interest), the mechanics of sex-chromosome transmission produce additional benefit for ancestors operating in a cultural system that favors males.

The first component of the chromosomal corollary to patrilineage focuses on father-son transmission of the Y chromosome. A male's Y chromosome can have only one source—his father, his father's father, his father's father's father, etc., ad infinitum. Geneticists oriented toward detection of genetic change (the more common orientation) view this phenomenon as one resulting in zero variance: i.e., the *non*-random, *non*-independent assortment of the Y chromosome, coupled with the fact that it is not subject to homologous crossing-over (the interchange of genes between homologous chromosomes), means that genetic differences that occur between father and son cannot be attributed to the Y chromosome. On the other hand, if Y-chromosome transmission is viewed as a constancy phenomenon, it can be presented as accounting for the fact that all patrilineally related males share a full chromosome *identical by descent*.[5]

The second and third components of the chromosomal corollary focus on X-chromosome transmission. Component 2 is an important by-product of the nature of Y inheritance—the fact that an ancestor's X chromosome has an opportunity to cross over only when being transmitted by a gamete from a female descendent. Viewed from the other perspective, an X chromosome necessarily passes *intact* from one generation to the next when passed by a male descendent. Accordingly, when calculating a pathway probability for a gene carried on an X chromosome, the probability that any particular gene will be lost by crossover varies with the number of female descendents on the path. Assuming that crossing-over is a reasonably common cytological phenomenon, the amount by which an X pathway probability must be corrected equals Pc^x, where x is the number of ancestral females on the path and Pc is the probability of crossover.

The third component is the fact that the most probable source of a gene carried on an X chromosome, whether it is a male's X or either of a female's Xs, is an ancestor on the most male-oriented possible line of descent. If all the possible ancestral sources of an X chromosome are mapped out and the attendant probabilities calculated for each pathway, it becomes evident that the pathway which turns to a male ancestor at every possibility will be the one containing the ancestors with the highest probability of having genes from an X chromosome which are identical by descent with that of the individual in question. Figures 2, 3, and 4 illustrate the possible pathways of descent and their attendant probabilities for, respectively, a male's X, a female's paternally derived X, and a female's maternally derived X.[6]

For the purposes of this paper, the importance of the chromosomal corollary is its effect upon coefficients of relationship. As recognized and quantified by Haldane and Jayakar (1962), the effect of sex-chromosome inheritance is simply additive to the coefficient of relationship as determined for autosomal inheritance. Accordingly, this extra or additive factor means that a male will be more related to his son's descendents (namely, his son's son's son's son, etc.) than to any parallel descendents of the same future generation. It should be noted that a man's daughter is as sure to inherit his X chromosome as his son is to inherit his Y. One might therefore conclude that his fitness would be more effectively enhanced if his heritable wealth were passed down a line of daughters (since the X chromosome contains more genetic material). Such an enhancement,

[5] Genetic information that is identical by descent is identical by virtue of having a traceable transmission—as distinct from genes that are alike in state, by chance, as a result of their frequency. For a discussion of this distinction, see, among others, Cotterman (1941), Malecot (1948), and Crow (1954).

[6] Since all versions of the Lyon hypothesis exclude the possibility of effects on germ cells, one need not consider its possible effects in X-chromosome transmission.

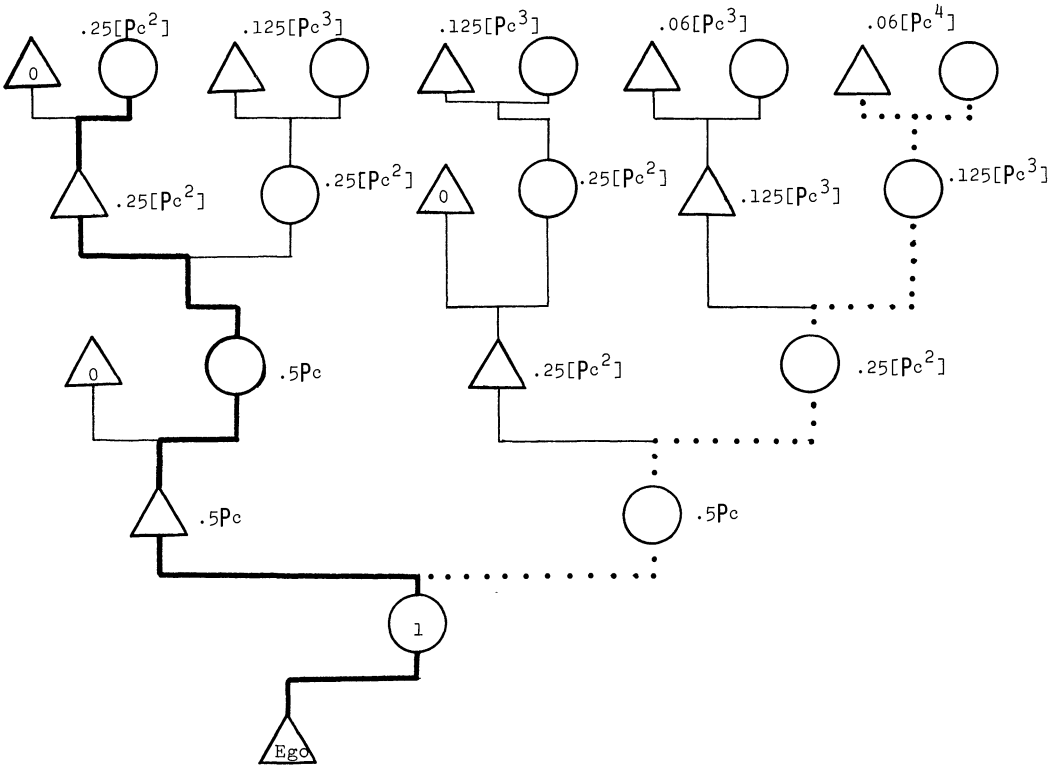

FIG. 2. Possible pathways of descent for a male's X chromosome and the attendant probabilities that a gene on Ego's X chromosome will be identical by descent with that of the ancestor. $p = \frac{1}{2}^x[Pc^x]$, where x is the number of female ancestors on the path and Pc is the probability of loss by crossover. *Solid line*, most likely line of descent; *dotted line*, least likely line of descent.

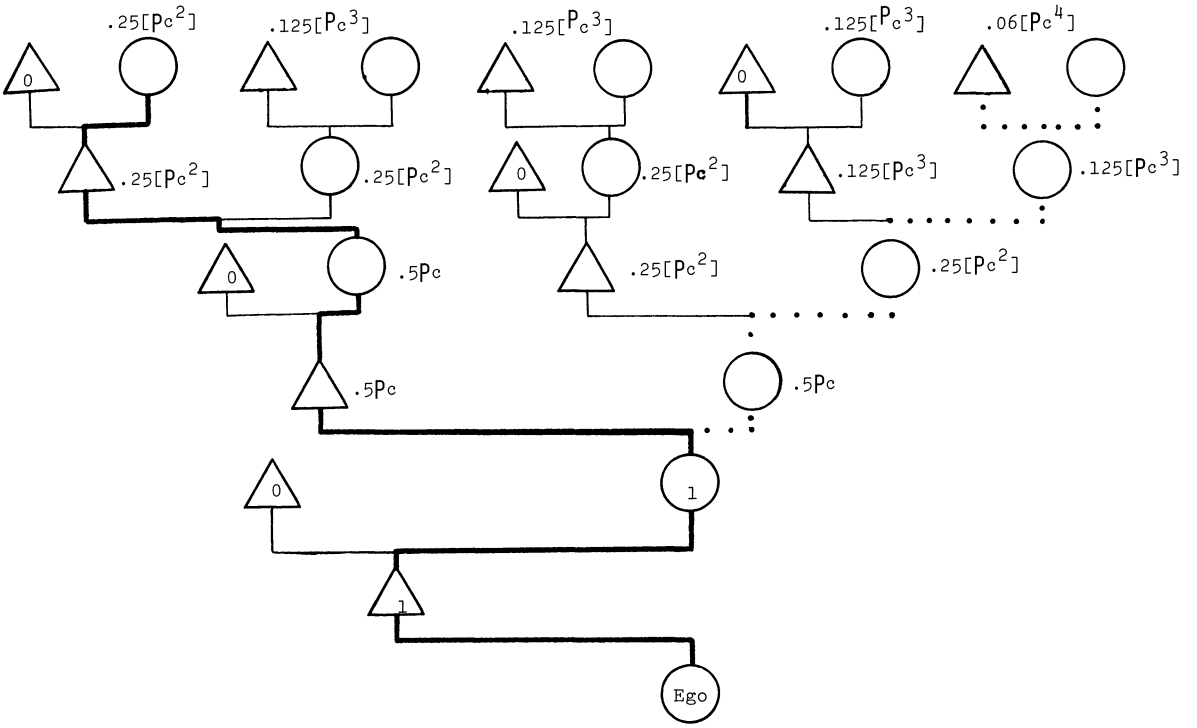

FIG. 3. Possible pathways of descent for a female's paternally derived X chromosome and the attendant probabilities that a gene on Ego's X chromosome will be identical by descent with that of the ancestor. $p = \frac{1}{2}^x[Pc^x]$, where x is the number of female ancestors on the path and Pc is the probability of loss by crossover. *Solid line*, most likely line of descent; *dotted line*, least likely line of descent. As Li and Sacks (1954:354) have pointed out in reference to sex-linked genes, "The relationship between paternal grandmother and granddaughter is the same as that between mother and daughter."

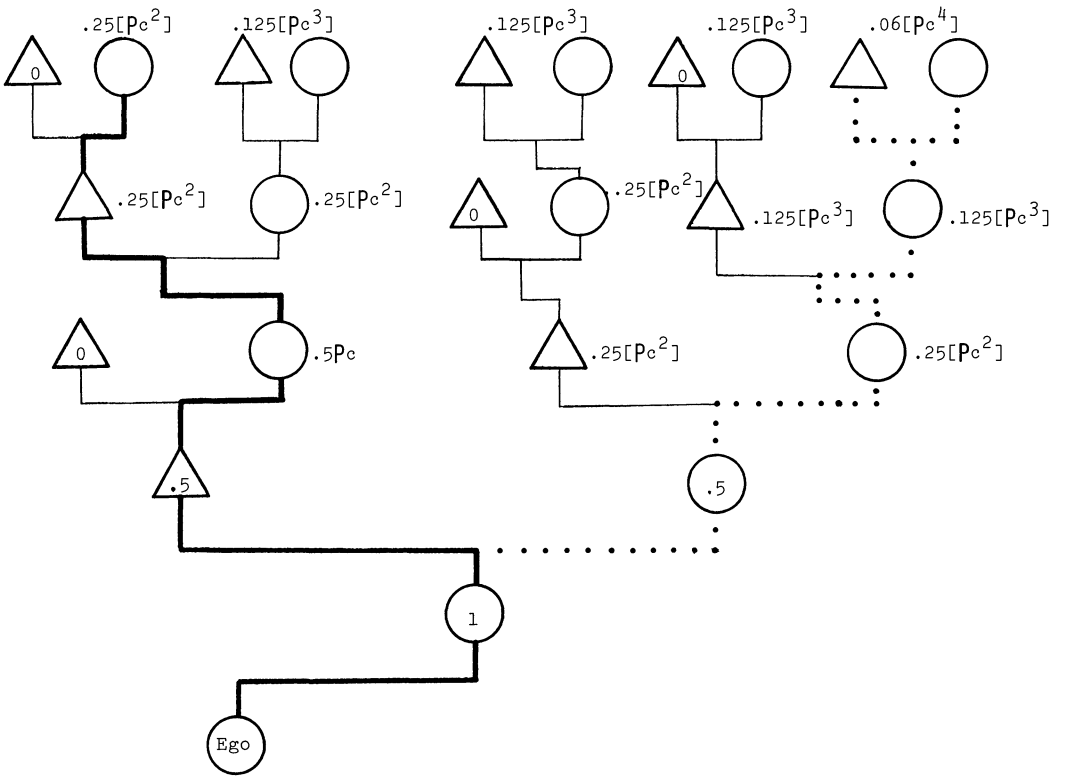

FIG. 4. Possible pathways of descent for a female's maternally derived X chromosome and the attendant probabilities that a gene on Ego's X chromosome will be identical by descent with that of the ancestor. $p = \frac{1}{2}^x[Pc^x]$, where x is the number of female ancestors on the path and Pc is the probability of loss by crossover. *Solid line*, most likely line of descent; *dotted line*, least likely line of descent.

however, would fade rather rapidly, for the probability that *that* X would follow such a line is more than halved with every successive generation.

In the event that some wealth were passed to a man's daughter, it would have the highest probability of following that man's X chromosome if it were subsequently passed on to that daughter's son. On his daughter's side, the descendents with whom a male will have outstanding coefficients of relationship will be the female offspring of his grandson, the female offspring of that grandson's grandson, the female offspring of that great-grandson's grandson, etc. In other words, in order for a man's wealth to reach the descendent (on his daughter's side) with whom he will have the highest coefficient of relationship (relative to other descendents in a given generation), that wealth will have to pass through his grandson as opposed to his granddaughter.

For a female, the additive factor will differentially affect her coefficient of relationship with descendents of every other generation, i.e., her grandchildren, her great-great-grandchildren, etc. At any one of these levels, the individual to whom she will be most related will be a descendent of her son (see fig. 5). Although this case is not as direct as the one for males, strength is added by the fact that the X chromosome carries substantially more genetic information than does the Y chromosome.

The chromosomal corollary, although not providing as strong a foundation for male preference as differential reproductive variance, operates independently of mating-system type. Given a couple living in a society with (1) sufficiently strong culturally determined inheritance behavior to assure continued transmission of wealth in a consistent pattern, (2) an equal sex ratio among offspring, (3) an unequal distribution of wealth, and (4) sufficient transferable wealth to increase descendents' reproductive success over succeeding generations, one can map out the probable sex-chromosome transmission for various inheritance patterns to show that if wealth is concentrated on sons (or first sons; see n. 2), (*a*) the ancestors in question will have more offspring on their son's side than on their daughter's side and, among these offspring, a significant number with differentially high coefficients of relationship, and (*b*) their transferred wealth will be increasing the reproductive success of offspring with the highest coefficients. If, on the other hand, wealth is concentrated on daughters, (*a*) the giving ancestors will have more offspring on their daughter's side (by the same amount as the increase in *a* above) and, among these offspring, a relatively larger number of individuals with a relatively *diluted* extra coefficient of relationship, and (*b*) their transferred wealth will be increasing the reproductive success of offspring with little or no extra coefficient. That is, although this phenomenon alone will not increase the absolute number of offspring in accordance with a given inheritance pattern, it will, when combined with male-preference behavior, increase the number of offspring having genes identical by descent with those of the original couple (see figs. 6 and 7).

In summary, on the basis of the chromosomal corollary, a male's fitness will be most enhanced if his heritable wealth is passed to his son, his son's son, etc. While this is not the ideal line of descent for a female (hers will be son's daughter's son's daughter's son, etc.; see fig. 5), some degree of male bias will provide a more effective fitness-maximizing effect than will transmission down a line of daughters. (Even though the descendent with the outstanding coefficient of relationship is not male, access to that descendent will depend on transmission through first-generation sons with some degree of male favoritism thereafter.)

COROLLATES AND CONTRADICTORY CASES

Alexander (1974:337) cautions that "it is easy to forget that parental care evolves, not because it increases the reproduction of individual offspring, but because it increases the reproduction of the parent." In order for the forces I have outlined to operate, it is necessary that the predicted behavior be consistent across generations—i.e., in order for ancestors to increase their inclusive fitness by passing wealth to sons, they must teach their descendents, both male and female, to follow this practice and in turn to teach it to their own offspring (establish it as a cultural norm). By way of accomplishing this, parents would be expected to teach their offspring a system of delineating their relatives in a manner that would differentially emphasize their importance. Of interest to cultural anthropologists might be the speculation that kinship reckoning is a system devised to facilitate or direct the transfer of wealth in the most propitious manner—i.e., that lineality is an artifact of inheritance pattern rather than vice versa.

Trivers (1974) argues that offspring may be expected to vie with each other and with their parents for the most favorable

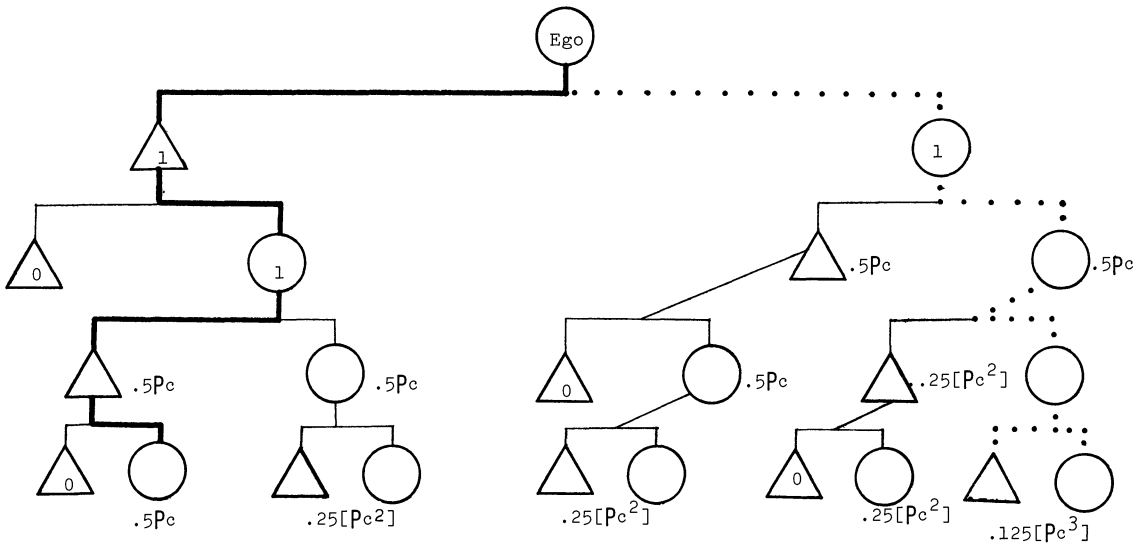

FIG. 5. Effect of X-chromosome transmission on the coefficient of relationship for a female. Here again, $p = \frac{1}{2}^x[Pc^x]$, where x is the number of females on the path and Pc is the probability of loss by crossover, and numbers indicate the probability that the descendent in question will have an X gene identical by descent with that of Ego. *Solid line*, most likely line of descent; *dotted line*, least likely line of descent.

amount of parental investment (see Hartung 1976). In cultures where males have high reproductive variance one might expect females to show less offense at preferential treatment shown their brothers than males would be expected to show if the situation were reversed. This follows from the fact that inordinate reproductive gains made by the brother, as a result of preferential treatment, somewhat compensate (genetically) for the lesser gains that could be made by his sister.

I have suggested that when the coefficient-of-relationship factor is combined with differential male reproductive variance, a strong selective advantage can be gained by individuals practicing patrilineal inheritance of wealth. Of 165 cultures in which it has been determined that rules for inheritance of real property favor either the male or female line, 144 favor the male line and 21 the female. Similarly, for the inheritance of movable property, 176 out of 211 favor the male line and 35 the female (Murdock 1967). Even though male preference seems to be the overwhelming inheritance strategy, one cannot disregard the cases that contradict the expected pattern.

Among the reasons that must account for some of the deviant cases are: (*a*) some of the 81 out of 400 cultures without sanctioned polygyny must have been evolving for a sufficiently long time as ideally monogamous (without much promiscuity or too high a divorce rate) to assure little difference between male and female reproductive variance; (*b*) many cultures simply do not have sufficient heritable wealth to affect reproductive success; and (*c*) some cultures have sexual habits which are not conducive to a high probability of paternity.[7] One always knows who one's mother is (and thus the female line is simply a matter of memory), but paternity is always (at least to some degree) a questionable matter. Men living in a society where the probability of paternity is .75 (25% chance of being in error when designating a male's son) would lose their "investment" to a competing male line in one out of four transfers. It is interesting to note, in this respect, Textor's (1967: Statement 198/391) finding that of 21 cultures favoring the female line in the inheritance of real property, 12 have been coded as to their attitude toward premarital sex relations, and 10 of these are societies "where premarital sex relations are punished only if pregnancy results, or freely permitted."

The special relationship that exists in a few cultures between mother's brother and sister's son might be seen as a means of getting around a low probability of paternity. This unique system allows wealth to pass from male to male without risking loss through mistaken assignment (see Alexander 1974 for an explanation of the genetic situation and Hartung 1973 for comparison of Alexander's perspective with that of several cultural anthropologists).

Another cultural practice that can be seen as a means, albeit gruesome, of dealing with probability of paternity is

[7] I prefer the term "probability of paternity" to the term "confidence of paternity" used (chiefly by ornithologists and entomologists) to indicate the same thing. When the term is applied to humans, there exists the possibility that "confidence" will be inferred to mean the degree to which a potential pater is confident that a particular progeny is his own. While his mental disposition may influence his behavior, it will not influence the degree to which that behavior will be to his selective advantage.

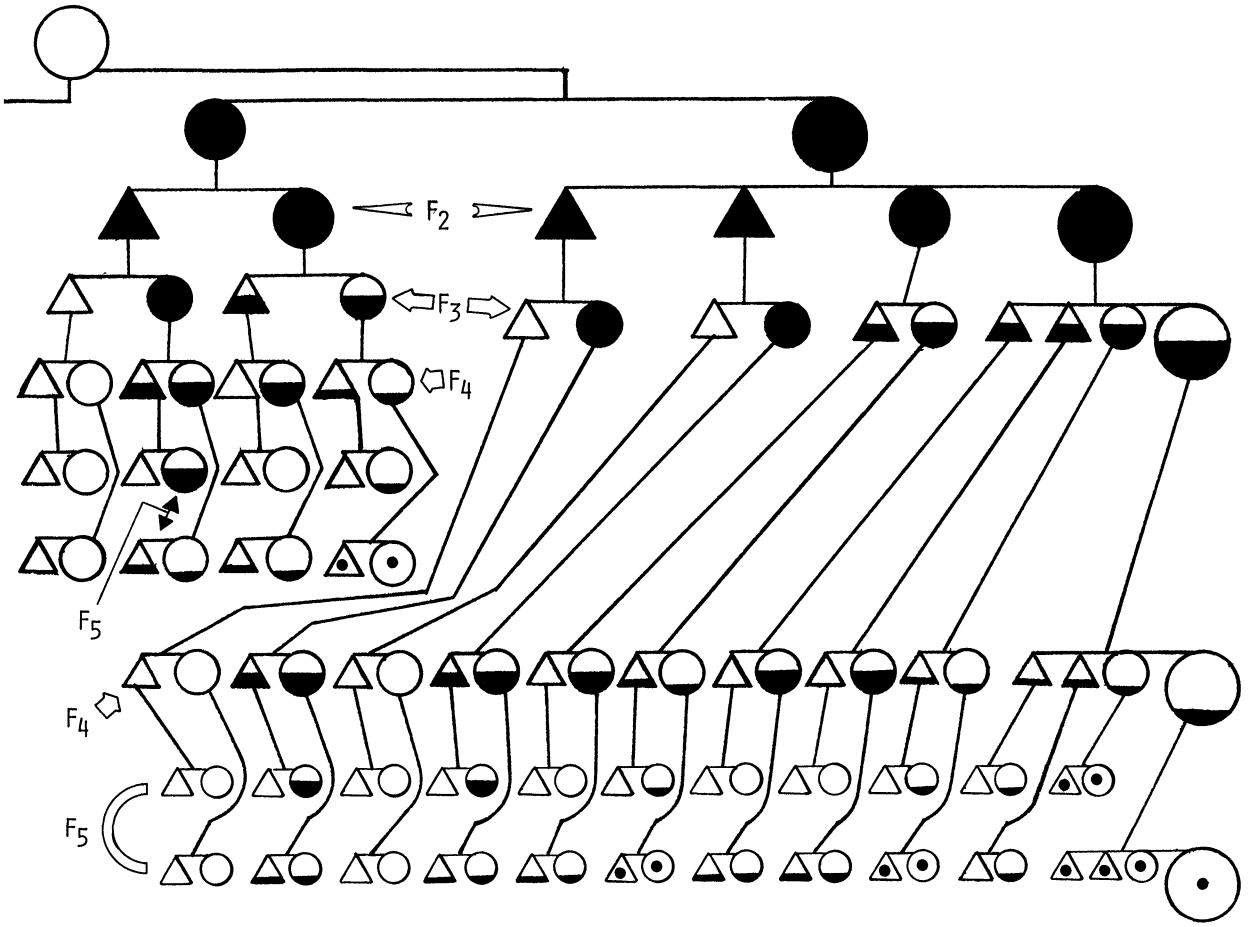

FIG. 6. Sex-chromosome transmission for wealth transferred along a line of first daughters, on the assumption that wealth is the sole factor affecting differential fitness and that inheritance increases reproductive success from 2 to 4. The large open circle represents an individual in possession of transferable wealth. The remaining symbols represent different probabilities that the descendent in question will have a gene on a sex chromosome identical by descent with that of the original ancestor: *solid*, $p = 1$ [Pc^1]; *half solid*, $p = .5$ [Pc^2]; *one-quarter solid*, $p = .25$ [Pc^3]; *open with dot*, $p = .125$ [Pc^4], where Pc is the probability of loss by crossover.

destruction of the potential for experiencing sexual pleasure among women. It has been alleged that our own culture (especially in its most Victorian-puritanical phases) has attempted to accomplish this through psychological conditioning. Throughout Ethiopia (and in parts of other countries), the female sex drive is bludgeoned both psychologically and physiologically via complete excision of the clitoris. Having made informal inquiries over a period of years (while living in Ethiopia), I found that, in addition to citing religious instruction, many males responded that this practice keeps women from having extra-marital affairs. This may be a case where the conscious motivation for a behavior corresponds to its selective-advantage foundation.

SUMMARY AND CONCLUDING REMARKS

Greater reproductive variance among males than among females has been presented as a component of natural selection's influence in determining preferential treatment of males in the inheritance of wealth. In conjunction, the transmission of sex chromosomes and the attendant probabilities that ancestor and descendent will have genes identical by descent have been traced for several generations in order to illustrate a male bias in a species whose male sex is heterogametic (XY) while the female sex is homogametic (XX). The effect (direct and additive) of this bias on coefficients of relationship leads to the hypothesis that transmission of wealth along the male line is more efficient, in terms of maximizing ancestral fitness, than transmission along the female line.

Those not accustomed to thinking in evolutionary terms might suppose that the forces outlined are not relevant to modern, monogamous industrial societies with readily available contraception and sophisticated educational systems. It should be kept in mind that man has been evolving as a cultural animal for some 3,000,000 years and that we have existed in modern form for over 50,000 years (DeVore and Konner 1974). The degree to which modern cultural practices are vestiges of our past can hardly be overemphasized.

It is important to realize that patrilineal inheritance is a human behavior which is largely maintained through cultural transmission from generation to generation—and that culturally transmitted behavior is, fortunately, more subject to rapid adaptive change than is genetically transmitted behavior. Even more important is the realization that natural selection, whether operating on culturally[8] or on genetically transmitted behavior, is necessarily and in all cases a quantitative process, while only circumstantially and conditionally a qualitative one.

[8] For an excellent example of a culturally transmitted behavior that is directly subject to natural selection, see Katz, Hediger, and Valleroy (1974).

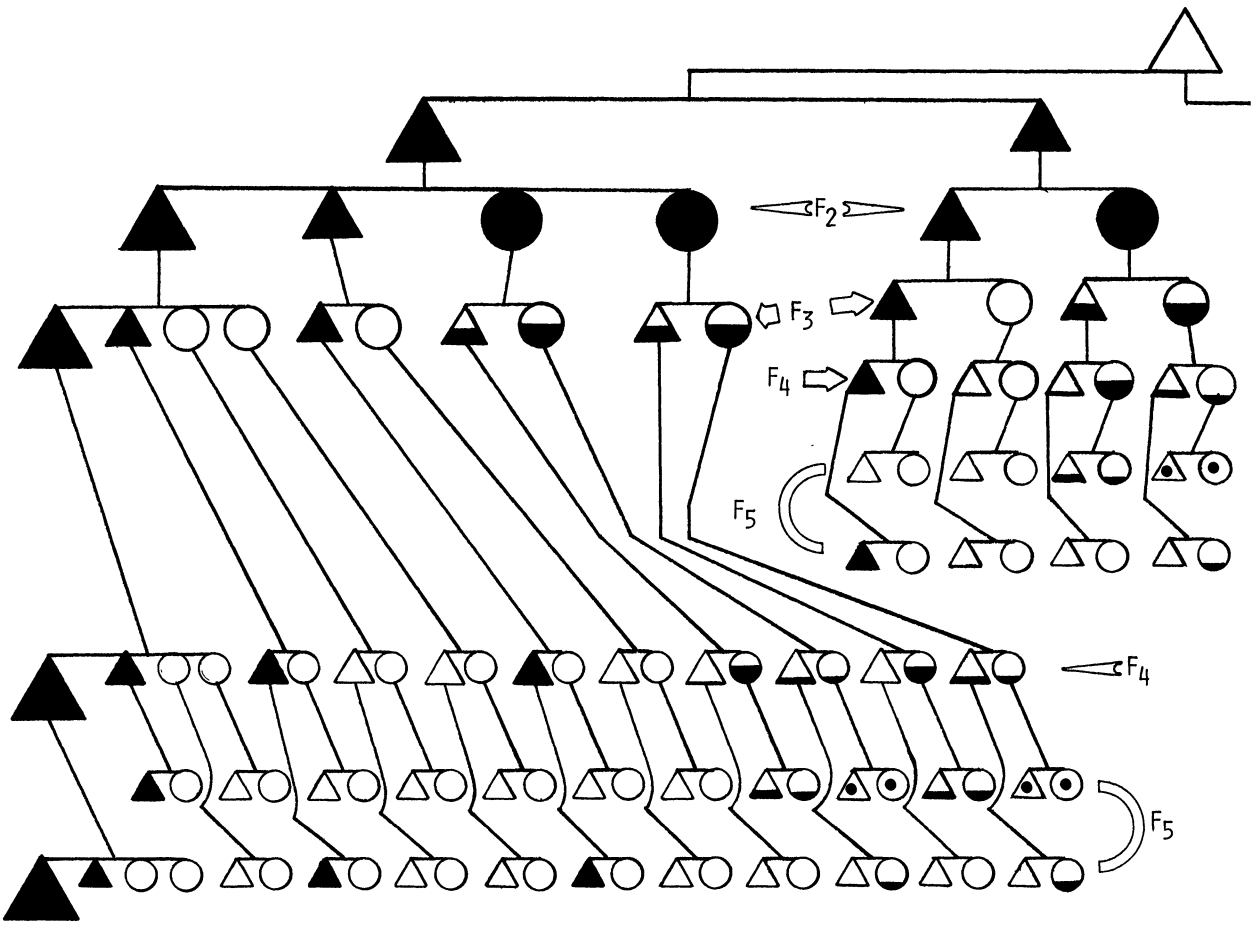

FIG. 7. Sex-chromosome transmission for wealth transferred along a line of first sons, on the assumption that wealth is the sole factor affecting differential fitness and that inheritance increases reproductive success from 2 to 4. The large open triangle represents an individual in possession of transferable wealth. The remaining symbols represent different probabilities that the descendent in question will have a gene on a sex chromosome identical by descent with that of the original ancestor: *solid*, $p = 1$ [Pc^1]; *half solid*, $p = .5$ [Pc^2]; *one-quarter solid*, $p = .25$ [Pc^3]; *open with dot*, $p = .125$ [Pc^4], where Pc is the probability of loss by crossover.

Comments

by Andrew E. Abelson
School of Cultural and Community Studies, University of Sussex, Falmer, Brighton, Sussex BN1 9QN, England. 5 vi 76

Hartung's main argument is that parents may increase their fitness by bestowing wealth on their offspring. In addition, he attempts to relate the inheritance of this wealth to the potential variation in the numbers of offspring of males and females, patrilineal society, polygyny, and the mechanism of inheritance of the Y chromosome.

There is room to doubt the validity of the proposed effect of wealth on the evolution of human behaviour. For much of the three million years to which Hartung refers, man was a hunter and gatherer. At that time there was little material wealth to pass from one generation to another. There is no evidence to suggest that the transmission of cultural knowledge obeys the laws of inheritance of genetic material. Patrilineal and patrilocal bands may have existed (Steward 1955), but few ethnographers subscribe to their widespread importance (Lee and DeVore 1968).

Data from tribal societies may, superficially, support Hartung's argument; but for the Yanomamo (see citations to Chagnon 1968, Chagnon et al. 1970, MacCluer et al. 1971), where the village headman fathers most offspring, leadership depends more on open competition than on an accident of birth (Neel 1970). Hartung's reference to Chagnon et al. (1970) is unfortunate. The authors of that article showed that (1) a female, (2) who was of low social status, and (3) who did not conform to established tribal custom had an unexpectedly large effect on the genetic structure of future generations.

In peasant societies, which in evolutionary terms are recent, wealth may be transmitted from one generation to another. Here, monogamy is more frequent than polygyny. In preindustrial European populations, wealth was often bestowed on females as a dowry at marriage (Eversley 1965).

As to the use of the *Ethnographic Atlas* (Murdock 1967), one needs much more detail to show that aspects of cultural behaviour are the specific results of the relationships that Hartung proposes. This is especially the case since, as he acknowledges, other explanations already exist. Exceptions cannot be explained away, for example, by saying that paternity may be difficult to establish. *Semper incertus pater est*, particularly in polygynous cultures.

The potential variation in the numbers of offspring of males and females and the mechanism of inheritance of the Y chromosome are common to all human populations. I see no reason to suppose that any causal relationship exists between such factors and culture-specific behaviour. Hamilton (1964) proposed his measure of *inclusive fitness* as part of an explanation of altruistic behaviour. Such behaviour is not necessarily related to specific cultures, but if it is, I doubt that South American tribal populations would be the best examples. And, so far as access to advantageous goods is concerned, Hamilton also argued that competition between relatives should be reduced. Polygyny results in fertility variation within populations of related individuals, not in fertility variation between unrelated populations.

What Hartung has attempted is a synthesis of ideas which were originally presented for a variety of very different reasons. His paper still fails to provide a unifying theme to relate them.

by Amitabha Basu
Indian Statistical Institute, 203, Barrackpore Trunk Rd., Calcutta 700035, India. 15 vi 76

Hartung's paper is indeed stimulating, especially to one uninitiated in the field of the genetics of social behaviour, but to stimulate is one thing and to convince another.

I do not contest the basic idea that some behavioural traits are genetically controlled; some may be so to a considerable extent, e.g., schizophrenia, behavioural disorders associated with certain gross chromosomal anomalies, etc. Such traits are undoubtedly subject to the action of natural selection, but to imagine natural selection influencing the inheritance of wealth is stretching the point too far. Wealth is generally understood, except in Hartung's definition (no standard definition incorporates ability, status, or the reproductive-success-enhancing property in the concept of wealth), in terms of material objects or their money value, which may be transmitted from generation to generation, but without reference to the biological units of inheritance, i.e., genes. The concept of natural selection, however, necessarily involves biological transmission, i.e., through genes. I personally find it hard to think of natural selection without reference to biological processes or of inheritance of wealth, a sociocultural trait, through a biological mechanism.

In a male-dominated society, natural resources and privileges are obviously monopolised by the males, and rules are formulated to ensure the continuance of this monopoly. One may justifiably attribute this phenomenon to appropriate sociocultural processes and coin a suitable term to denote them. To invoke the biological process of natural selection to explain this sociocultural phenomenon, however, is, even though unconsciously, to try to lend credence to the inequitable social custom of patrilineal inheritance. To cite a close parallel, in a class-divided society wealth is concentrated in the hands of the exploiting classes, and elaborate mechanisms exist to ensure the continuance of the same, but would anyone imagine a natural-selection, i.e., biological, basis for the class system?

I do not deny that possession of wealth and the ability to transfer it to one's offspring enhance one's reproductive success over time, i.e., fitness in the genetic sense. In view of the relatively greater reproductive potential of males than females —incidentally, I am not sure that differential male/female reproductive variance is the best, or the only, indicator of sex-differential reproductive potential—I would also admit that reproductive success is likely to be greater through male than through female descendants. Further, transference of wealth through the male line of descent, undeniably, may confer an advantage on the genes carried by the "giving ancestor" in transmission to future generations. All this, however, merely means that patrilineal inheritance, a social custom, may lead to natural selection in favour of certain genetic traits, assuming that the genes carried by wealthy people are different from those carried by the not-so-wealthy—an assumption open to question. It does not necessarily imply that patrilineal inheritance of wealth itself is a product of natural selection.

In my opinion, there is a basic misunderstanding which needs to be clarified: traits inherited in a certain manner, or affecting a genetic phenomenon, need not themselves be carried in the genes. One has to be especially cautious in dealing with such sociocultural traits as, for example, clannishness, altruism, education, wealth, etc., not only because their definitions are much more variable and subjective than those of biological ones, and not even because their transmission is achieved more quickly and effectively by cultural than by biological processes, but essentially because in current thinking the concept of natural selection necessarily involves the presupposition that the traits affected by it are largely determined by genes, while sociocultural traits do not warrant such a presupposition.

That single error of understanding has reduced much of Hartung's labour to an exercise in futility—and, in concluding this, I assume that he is not deliberately trying to think up justifications for an exploitative social system in which one section of the population, the females, is systematically deprived for the benefit of another, the males.

by MAHADEB PRASAD BASU
c/o Anthropological Survey of India, 27, Jawaharlal Nehru Rd., Calcutta 700016, India. 22 VI 76

The search for social behaviour determining the biological course of events is not new. We have different social practices which not only regulate marriage and mating within a group, but also determine to some extent its genetic composition. Evolution works at this unit level. Hartung has synthesised current researches in three cognate fields—culture, genetics, and natural selection—and concluded that such social behaviour as wealth-giving has conscious or unconscious motivation for maximising the "fitness" of the giver.

In connection with the transmission of characters through the Y chromosome, the author cites the work of Stern. If I am correct, in the Indian reprint of his 1960 book Stern does not mention anything about the hairy ear as being Y-linked.

Hartung uses such terms as "reproductive success," "fitness," "advantage," and "gain" more or less synonymously. Fitness, according to biological dictionaries, refers to populations and not to individuals. As far as I can judge, Hartung also means populations and not one or two individuals who may be in an advantageous position by possessing wealth. If we consider the cases of these lucky few, their descendants surely have the reproductive advantage, but there is also the question of utilising the advantage instead of abusing it. It is not uncommon in history for the descendants of the affluent class to abuse their wealth instead of utilising the advantage for continuous reproduction. It is also held that the affluent class in a society, even without practising family limitation, is less fertile. Moreover, the ablest individuals anywhere are exposed to more of the dangers of life and hence are likely to be eliminated. Thus, even though they are in an advantageous position, they may multiply less than the average people.

Hartung has drawn international attention to the biological implications of the efforts of humans to accumulate wealth over time. But is the evolution of social behaviour unidirectional enough, over three million years of a chequered cultural existence, to allow us to say that inherited wealth has enhanced biological fitness? Hartung's arguments are understandable, but to support such a premise more historical and cross-cultural examples seem imperative. The speculation on kinship reckoning for the purpose of transmission of wealth is provocative both to archaeologists and to social anthropologists. In conclusion, it is easier to disagree with Hartung's premise than to agree with it.

by KENNETH L. BEALS
Department of Anthropology, Oregon State University, Corvallis, Ore. 97331, U.S.A. 8 VI 76

Any explanation on the grounds of selection requires that some degree of differential fitness be present. I am unable to understand how either sex could maximize its fitness compared to the other, even recognizing male heterogamety and greater reproductive potential. Presumably, however, this is a semantic issue which Hartung can clarify.

The unit of reproduction in a bisexual species is actually not the individual of either sex. The only way in which an individual can be produced is from a mating type, and this obviously requires both sexes together. Fitness is the relative genetic contribution to succeeding generations. Since only mating types can produce the succeeding generation, the concept of fitness can apply only to mating types.

It is thus not possible to have differential fitness between the sexes or for one sex to maximize its fitness at the expense of the other. The only way in which fitness can be ascertained is by investigating relative fertility and mortality (prior to reproductive completion) among the offspring of the mating types. Despite a greater reproductive potential for any particular male, the males and the females within a breeding population must have identical fitness. Otherwise, I take it as an implication that one sex could be more fecund than the other. It does not seem meaningful to have a concept of differential fitness by sex when fitness depends upon the combination of sex and the fitness of either sex is zero as such. Nonetheless, Hartung and I would probably agree this is an argument confined to technical triviality.

What is more important is that Hartung has demonstrated additional relationships between human biology and culture. The understanding of both is enhanced.

I have doubts about the empirical significance of "these theories [which] are put forward as causal explanations." More easily observed differences between the sexes are also involved in the patterns of descent and residence. For example, agnatic emphasis in the kinship structure is generally recognized to be correlated with pastoralism, and matriliny with horticulture. Animal herds move while garden plots stay in place. Herding animals and babies at the same time is difficult, to say the least. Given such increased child care difficulty for women, it is to be reasonably expected that the men will have more control over the primary means of subsistence. A patrilineal and patrilocal bias can be seen as the result of pastoral compared to horticultural wealth plus the ecological and sexual variation with family maintenance. Hartung's theory of fitness-enhancing potential is an intriguing addition.

by B. CHIARELLI
Institute of Anthropology, University of Turin, Turin, Italy. 3 VI 76

The paper by Hartung is obviously of interest for its attempt to integrate biological and socioanthropological knowledge. As a biologically oriented anthropologist, however, I have to say that the biological aspect is somewhat superficially analyzed. The concept of wealth developed only in a recent period of human evolution, certainly since the Neolithic. This does not allow enough time to fix it in a gene pool and on the Y chromosome. Moreover, Hartung overlooks the continuing matriarchy of many cultures. Even though most of the ideas expressed are stimulating, I wonder if the entire subject does not need deeper analysis and solider factual support.

by CYRIL C. CURTAIN
12 Esplanade, Williamstown, Victoria 3016, Australia. 18 VI 76

In his introduction Hartung states that an individual maximizes the fitness-enhancing potential of his wealth if he transfers it to the descendants who inherit the highest concentration of his genes. Later he introduces the concept of the Y-chromosomal corollary to the patrilineal transmission of wealth. However, although the Y chromosome is not subject to crossing over, its DNA is still mutable at an unknown rate. It is not strictly true, then, that all patrilineally related males share a Y chromosome identical by descent. This aside, the theory requires us to believe that the Y chromosome carries a large complement of genes which assure the individual's ability to both gain and retain wealth—two rather separate attributes anyway. To support his contention that the Y chromosome carries behaviourally significant genes, Hartung cites Hook's (1973) review on the XYY genotype, but ignores the evidence that the social pathology which is claimed to be its dosage effect occurs only in Caucasians, not in other ethnic groups where nevertheless this genotype is found. Clearly, the effect of the Y genes is markedly influenced by the environment and the rest of the genome.

The debate on the evolutionary significance of behaviours

such as aggressiveness and acquisitiveness has been with us for a long time. Plausible models for the fitness-enhancing potential of genes for both altruistic and selfish behaviour have been constructed (Eisenberg and Dillon 1971). It seems quite credible that both may have played a part at different times in the evolution of man and his societies. We must constantly remind ourselves, however, that it is populations that evolve, not pedigrees, i.e., that natural selection does not work towards the fixation of a particular genotype for adaptedness. Most dynasties and other blood lines are ephemeral; genetically they can never get it all together. This is aptly summed up by the old Lancashire saw, "from clogs to clogs in three generations."

by Charles Roy Edwards
State University College at Brockport, Brockport, N.Y. 14420, U.S.A. 14 vi 76

Anthropology is the science of man as a bio-sociocultural animal; in it, biology, society, and culture are necessarily interrelated components of man's evolution, adaptation, and behavior. Regardless of the strengths or weaknesses of Hartung's argument, this paper presents an anthropological perspective which will, I hope, be expanded in the future. It describes a sociocultural context in which genetic processes may operate, presents a biogenetic context in which culturally defined adaptive strategies may develop and operate, and avoids the monolithic biological determinism that mars discussions of biological bases of human behavior and the equally monolithic cultural determinism which assumes that human behavior exists entirely outside the context of the human genotype.

Since I am not familiar with the demographic material that would either support or refute Hartung's argument, these comments will be restricted to the methodological implications of his paper. First, it seems premature to describe his arguments regarding the implications of reproductive variance, the chromosomal corollary, and the inheritance of wealth as these influence the wealth giver's fitness as *theories*. As the term is customarily employed, *theory* is a body of knowledge arising from a number of confirmed observations of the relationships between phenomena. *Hypotheses* are questions regarding the relationships between phenomena, the answers to which may or may not be confirmed or confirmable. When confirmed, a body of hypotheses may form the basis for a theory. In light of the fact that Hartung's stimulating paper does not provide the demographic observations necessary to support the contention that patrilineal inheritance of wealth does, in fact, "[maximize] the fitness-enhancing potential of the giver's wealth," it would be more appropriate to use the safer and less encompassing term *hypothesis* in this case. While this may seem like definitional hairsplitting, its implications are considerable, since the questions raised by Hartung's paper require and deserve further investigation and would benefit from a broad-ranging study of inheritance patterns and demography.

My second comment concerns the likelihood that long-range reproductive fitness is sufficient to influence, to say nothing of "cause," something as plastic as material inheritance. In contradiction to this assumption are numerous cases in which cultural or social institutions have the potential for reducing reproductive efficiency, fitness, or both. Cross-cousin marriage, for example, has the potential effect of reducing genetic variability which might otherwise serve as a buffer against a changing environment. Similarly, institutions which result in delaying male reproductive age may have the effect of increasing mutation frequencies, with consequent increases in prenatal mortality and postnatal mortality and morbidity (Vogel 1971), all of which can reduce fitness. These scattered examples, of course, do not disprove Hartung's hypotheses. They do, however, suggest the alternate hypothesis that causal explanations of social institutions are rooted in immediate real or perceived needs despite the long-term consequences of these institutions.

It is hoped that papers such as Hartung's will stimulate future work on the relationships between sociocultural processes and biogenetic processes. At the most, such research would reinforce our knowledge of the development of sociocultural systems. At the least, it would help to preserve anthropology as an integrated discipline and would help to stem the movement toward subdisciplinary parochialism that has been evident, at least in American anthropology, over the past decade.

by Alan G. Fix
Department of Anthropology, University of California, Riverside, Calif. 92502, U.S.A. 22 vi 76

Hartung's argument is ingenious and perhaps even plausible. However, in my opinion, he fails to substantiate his claim to have made a "causal explanation" of patrilineality. That is, he does not demonstrate that the reproductive benefit of patrilineal inheritance is any more than an *effect* of the system of inheritance. To show that an item may function in a particular manner says nothing about whether that item is an antecedent necessary condition for the development of the system. In particular, there is no evidence or necessity that Hartung's biological functional argument would have priority in explanatory force over sociological functional arguments.

Secondly, he does not adequately test his hypothesis and is therefore unable to specify how much of the variation in inheritance systems his theory can account for. An initial difficulty is simply lack of sufficient data. As he admits, little is known about the Y chromosome, and few data exist on relative variances of males and females (five of his six references are to South American Indians). Thus the *magnitude* of benefit is simply unknown, but it is exactly this which is relevant to explaining the variation in systems. If Hartung is correct in his reasoning, and given the universality of the reproductive mechanism in humans (and in other mammals, for that matter), the pressure for patriliny should be universal. Since Hartung cannot show that the degree of reproductive payoff is large (because of lack of data) and since patriliny is not universal, his thesis rests on the plausibility (rather than demonstration) of his arguments. A number of lines of reasoning and evidence either run counter to his argument or are indeterminate.

1. Preferred polygyny may not produce significant differentials in male/female reproductive variance. In my own data (Fix 1976), only one of some 230 adult males was polygynous, although polygyny is certainly preferred by the men. This suggests that Hartung's citation of the frequency of societies in which polygyny is preferred is not a relevant test of his hypothesis. Moreover, fertility rates of polygynously mated women may be lower than those of women monogamously mated. In Africa, for example, monogamous women are 1.5 times more fertile than polygynously married women (Brass et al. 1968). Polygyny may thus increase *female* reproductive variance as well as not substantially increasing that of the males.

2. The presence of significant amounts of heritable wealth may also be questioned for many societies. Hartung argues that modern cultural practices may be "vestiges of our past" and reminds us of the long Paleolithic, during which most of human evolution occurred. Yet it is precisely among hunters and gatherers that individual wealth and status prerogatives are least developed. With increasing wealth came increasing differentials in wealth, so that even in richer societies many men will have little to pass on to their offspring. In addition, among hunters and gatherers and horticulturalists, the items that are inherited are often specifically of use to one sex. Given the sexual division of labor, bows would be irrelevant to females.

3. Hartung never mentions societies in which inheritance is bilateral. American society is not alone in passing some items lineally (surnames) and others bilaterally or along the opposite line. Are these negative cases for his hypothesis?

4. The most complicated question is whether Darwinian natural selection applies to cultural behavior. Any reproductive advantage possessed by an individual will increase his genes in subsequent generations. Parental care, insofar as it is *genetically determined*, will increase in frequency if it confers a reproductive advantage (i.e., there will be more genes for care in the offspring generation). The argument against Lamarckian theory is that if the trait is not heritable, it will not necessarily increase in frequency. Hartung does not claim that inheritance patterns are genetic. Therefore it is not obvious that Darwinian natural selection is strictly applicable here. I do not say that it cannot be so—only that it has yet to be demonstrated, Alexander's (1974) assertions notwithstanding. Indeed, it is equally plausible that insofar as cultural traits are Lamarckian in "inheritance," group selection could be operating; but this is not the place to pursue this argument.

In summary, while deserving of careful further study, Hartung's "explanation" of patrilineal inheritance remains speculative. It does seem to me that his argument is interesting independently of whether or not the biological consequences turn out to be secondary to the sociological causes, but I hope that it will be remembered that the "functional dragon" (Orans 1975) threatens biological arguments as well as sociological ones.

by KENNETH A. KOREY
Department of Anthropology, Dartmouth College, Hanover, N.H. 03755, U.S.A. 28 VI 76

Hartung appropriately calls our attention to the stochastic implications of descent for population structure. In applying Trivers's (1972) construct of parental investment, he has initiated a promising course of anthropological inquiry. It is regrettable, therefore, that his thesis is freighted with its assertion of causality.

An epistemological examination of Hartung's proposal is hardly facilitated by his failure to adumbrate the mechanism which he believes responsible for the establishment of patrilineal descent. Nothwithstanding the rigorous epistemology of Hempel (1959) and Jarvie (1973), we expect at least some ascription of causality either to intention or to adaptiveness (Köbben 1973). Although Hartung posits a functional role at the individual level (viz., enhancement of fitness), under the terms of his analysis I fail to see in what sense patrilineal descent as an institution is adaptive; neither does it increase the net reproductivity of the group nor is group survival dependent upon it. Presumably the group is the evolutionary unit in the cultural domain as it is in the biological domain.

On the other hand, if Hartung is correct in his claim, since patrilineal descent is not ostensibly adaptive it follows that its establishment by intent demands some collective perception of reproductive advantage. It is unimaginable that the extra degree of relatedness resulting from the mechanics of sex-chromosome transmission be at all detectable. Inability to identify this long-term effect precludes the possibility of intentionality. Alternatively, it is conceivable that the greater reproductive potential of males be recognized, particularly in polygynous societies, and this does admit the possibility of intention. Such intentions yet extant are in theory subject to empirical verification. The intractable difficulty is that there is no nontautologous basis for inferring intentions no longer extant in patrilineal societies.

However ill-founded Hartung's explanatory claim, his discussion is not without value viewed in terms of the genetic implications of patrilineal inheritance and its consequences for the structure of populations. It is from this perspective that I frame my subsequent comments.

Hartung contends that investment in male offspring augments parental—particularly paternal—representation in successive generations. It may well follow that, where sex-specific inequalities in the reproductive variance exist, investment in male heirs enhances fitness. While this postulate is logically reasonable, its analysis is both superficial and lacking in empirical support. Apart from an overly simplified operational model (fig. 1), Hartung offers no formula by which to adduce the determinacy of these effects; we are given insufficient indication of the circumstances actually required to confer reproductive advantage. By implication, Hartung's own references mirror an uncertainty about the necessary and sufficient conditions in question: while on one hand he recognizes historic cultures without property enough to influence fertility, on the other he invokes 3,000,000 years of culturally patterned behavior as the proper framework in which to view the evolution of patrilineal descent. In this latter case I find it difficult to imagine what wealth commonly possessed by hunters and gatherers might exert significant regulatory effects upon their fertility. Moreover, there is no reason to believe from evidence cited that increased fertility is typically the consequence of patrilineal inheritance. Without empirical substantiation this remains an intriguing but essentially unvalidated speculation.

The corollary contention, relating the mechanics of sex-chromosome transmission to increased male fitness, is deficient in a number of respects. The term Pc, which in the path analysis evidently represents the probability that an ancestral gene on a maternal X-chromosome will *not* be lost through crossover, is incorrectly defined as the probability of its loss. Substitution of $(1 - Pc)$ for Pc in figures 2 through 7 would rectify this error. Hartung seems to overlook the implications for male chromosome transmission of a female descendant's intervening at any point (after the F_1 generation) in a continuous succession of male descendants. Since this marks the complete elimination from the pathway of all male ancestral sex-chromosome genes, the investment in a male line is jeopardized by the risk of a future failure to continue the succession. Finally, Hartung provides a misleading sense of the magnitude of this phenomenon relative to the effects stemming from potential reproductive inequalities. My own intuition is that the chromosomal corollary represents a comparatively trivial effect, of too little importance to deserve the extended treatment received here. Nevertheless, it would be desirable to have a somewhat more systematic integration of these phenomena.

by PARTHA PRATIM MAJUMDER
Indian Statistical Institute, 203, Barrackpore Trunk Rd., Calcutta 700035, India. 14 VI 76

Hartung's article leaves me somewhat confused; I am not sure whether I have been able to understand it fully. If I understand Hartung's intentions, he has tried to convey first that, since "wealth is a decisive parameter for securing multiple mates," the best strategy by which the individual can enhance his fitness is by transferring his wealth (when he has reached the postreproductive stage) along the male line. Secondly, as is well known (see, for example, Neel 1970), this process of sustenance of the pattern of polygyny provides an effective device for certain types of natural selection. Hartung has succeeded in conveying his first message fairly well, but, so far as the second part of the story is concerned, he has not spelt out clearly how this pattern of polygyny provides a basis for natural selection. Perhaps he takes it for granted that it is too well known a fact to amplify!

by JAMSHED MAVALWALA
Department of Anthropology, University of Toronto, Toronto, Ont., Canada M5S 1A1. 28 VI 76

Hartung's premise is that "an individual will maximize the fitness-enhancing potential of his wealth if he transfers it to

descendents who have inherited the highest concentration of his genes." He goes on to suggest that two mechanisms "form the foundation of a natural-selection basis for patrilineal inheritance." I agree that transmission of wealth does indeed enhance reproductive success, but the logic of both of Hartung's explanatory mechanisms is flawed.

The first mechanism, involving comparison of reproductive variance, does not take the following considerations into account:

a) In terms of genetic variability, it is currently postulated that the bulk of the genetic code is species-specific and that only 3–10% of it varies from individual to individual. This weakens Hartung's argument considerably.

b) Because of crossing over within the 22 somatic chromosome pairs, a higher concentration of genetic coding can possibly be transmitted from a father to a daughter, rather than to a son.

c) The "concentration" of genes in the male line that Hartung refers to can easily be vitiated by one specific homozygous or heterozygous condition that directly affects the reproductive capacity of the individual or that is involved in the transmission of a trait that may not directly involve the biological reproductive process, but whose phenotype is culturally abhorrent, thereby effectively limiting mates.

d) While it is true that a male's reproductive success can result in hundreds of children in his lifetime, this success is at the expense of other males in the group and is also dependent on the female capacity to initiate a pregnancy.

e) In no human society do all females and all males of reproductive age stand an equal chance to procreate. Cultural factors determine sexual attractiveness, and mating is often dictated or deterred by cultural factors, such as the dowry in Hindu twice-born castes, socioeconomic status, the celibacy of religious orders, and many more.

The chromosomal corollary to patrilineage should take into account that our information on the Y chromosome has changed since the early 1960s in the following ways:

a) We now know that *Icthyosis hystrix gravior*, the so-called porcupine-man condition, occurs in women and is therefore not Y-linked. Hypertrichosis (hairy pinnae) has now also been demonstrated in females. At present relatively little is known of specifically Y-linked conditions. While it is true that sex-linkage refers only to X-linkage, we should not forget that many human traits that occur in males only or in females only (the sex-limited and sex-controlled traits) are governed by sequences encoded in the autosomes.

b) The assumption that an extra human Y chromosome endows its owner with aggressivity is not borne out by our current knowledge of human chromosome structure and function. That Klinefelter Syndrome males [XXYY] differ from XYY males is based only on the behaviour attributed to known XYY males, who were identified by karyotyping *after* they had displayed socially unacceptable violent behaviour. That the extra Y endows its recipient with violent sexual prowess, acne, tall stature, etc., is now seriously questioned by cytogeneticists, who are quick to point out that there may be as many as one-third of a million XYYs in the white (or, more exactly, pink) population of the U.S.A. alone. On crossing over, one end of the Y does exchange material with one end of its X partner. It would be inaccurate to claim with certainty that the X chromosome passes *intact* from one generation to the next when passed by a male.

c) In discussing the "additive factor," Hartung should bear in mind that autosomal inheritance of the 22 pairs of chromosomes other than the XY or the XX pair can easily outweigh any advantage or disadvantage conferred by the sex chromosomes. Downs Syndrome, localized in the G group of chromosomes, has been estimated to be as frequent as 1 in 600 live births in the United States, and the E Trisomy and Cri-du-Chat Syndromes override all other considerations.

It is far more likely that the patrilineal form of transmission of cultural wealth is a bequest from the nonhuman primates, which, like *Homo sapiens*, undergo extensive socialization and among which the status of the individual in society is often affected by the status of his mother and her relationship to the dominant male.

by Abhimanyu Sharma
D-12, 29/31, Probyn Rd., University of Delhi, Delhi 7, India. 7 vii 76

This is an excellent theoretical model, but I would like to see it actually applied and tested on known wealthy families (e.g., the Fords or the Rockefellers, in the United States) to see whether Y or X transmission (through male or female line) fits it or not. There is a new trend in anthropology—started by Huxley and Simpson and carried forward by Montagu and Washburn—that holds that no biological problem can be solved without the assistance of social/cultural phenomena, and vice versa. In a recent lecture on tool using and tool making in man, the subhuman primates, and lower animals, I have argued that the subject cannot be understood by considering tools alone, but only by relating them to the process of hominisation of the human brain, teeth, midfacial prognathism, and pelvis, and at the same time that the process of hominisation cannot be properly understood without a thorough analysis of tool use by animals from invertebrates to chimpanzees and purposeful tool making and use by man. Models must reflect the reality of an anthropological situation and not be only mathematically correct on paper.

by Emöke J. E. Szathmary
Department of Anthropology, McMaster University, Hamilton, Ont., Canada L8S 4L9. 25 vi 76

Hartung argues in his conclusion that the evolutionary pressures he has outlined are still relevant and that modern cultural practices in industrial societies may be taken as vestiges of our past. This argument, if it is based on the subject of his paper, assumes that patrilineal transmission of wealth (wealth meaning property rights, moveable goods, social status, and knowledge) to sons is a characteristic of modern industrial society. Clearly, this is not so. In modern northwestern European societies and in North America, descent (as indicated by the surname) is traced through the male, but both sons and daughters inherit the name and the prestige associated with it. Property, moveable wealth, and "knowledge," in addition, may be acquired from either parent by children of both sexes.

This simple example points out a major flaw in Hartung's argument. Patterns of descent are not necessarily synonymous with patterns of inheritance. Patrilineal descent does not imply that (1) sons inherit exclusively or that (2) mothers may not transmit wealth to their sons and daughters.

Those who would wish to see a biological basis to patrilineal descent and male primogeniture in European history would do well to read Goody's (1969) cross-cultural analysis of inheritance patterns. His study clearly shows significant association of inheritance of wealth by children of both sexes (i.e., "diverging devolution") with plough or intensive agriculture, social stratification, and large states. Goody shows that this type of inheritance pattern tends to characterize Eurasian societies, while homogeneous devolution (Hartung's inheritance schema) tends to characterize African societies. Multivariate analysis of the same data led Goody, Irving, and Tahany (1971) to postulate a causal relationship between diverging devolution and endogamous marriage, father's brother's daughter marriage, monogamy, and prohibited premarital sex. They see the rise of intensive agriculture and subsequent accumulation of wealth as instrumental in the origin of the diverging-devolution type of inheritance pattern itself.

Lest some think that male-to-male transmission of goods characterizes the earlier stage of our history, it is worth pointing out that in modern band-level societies that do have unilineal descent groups (e.g., Australians) there is almost no "wealth" to transmit. Other band-level societies, such as the Eskimo or Bushmen, do not have unilineal descent groups within which unilineal inheritance could be postulated.

Hartung's analysis is interesting, and I, like him, found Hamilton's model of the evolution of altruistic behaviour compelling. I maintain, however, that in analyzing the roots of our behaviour it is first necessary to define the behavioural universals that characterize our species. Patrilineal descent, implying male-to-male transmission of wealth, is a poor choice with which to start.

by CORINNE SHEAR WOOD
Department of Anthropology, California State University, Fullerton, Calif. 92634, U.S.A. 28 VI 76

Hartung's somewhat Panglossian configuration is a fun-and-games kind of exercise. In terms of natural selection in human evolution, however, the inclusion of the inheritance of material wealth instantly eliminates more than 99% of all human evolution. To the extent that wealth may be a factor in selection, it would only have become so after humans had adapted to a sedentary or agricultural mode of existence, when "property" could become a reality.

The factor that must have been of most vital concern throughout most of human existence is the ability to share possessions, i.e., food, shelter, protection, and knowledge. This sharing would have been critical not only with one's own offspring, but also with an extended number of the kin group—a much more advantageous strategy for continued survival than a selective nurturing of the possessors of a specific Y chromosome.

In terms of human survival, the reservation of personal property would have been maladaptive to the reproducing unit and the band, the critical bodies acted upon by natural selection. Particularly, the reservation of knowledge could be seen as immediately deleterious to one's own as well as to others' genetic complements. For example, if "tools and knowledge" were distributed in rigidly patrilineal, or, in fact, matrilineal, lines, in the conditions that applied through much the greater portion of human existence, it might be conjectured that the entire population, including the Y-bearing, favored beneficiaries, would enter the endangered-species list forthwith.

"Man's reproductive history and his social behavior and by extension the structure of his cultures" are not denied. Rather, the male role in reproduction is such that, even if he chooses to participate beyond the inseminating stage, it can only be in a social or cultural role. On the other hand, the reproductive role of the female is such that, lacking her postnatal biological participation, the species would cease to exist. Hartung understates the female investment in each offspring, an investment of time, energy, and labor that only begins with fertilization and that, incidentally, until very recently, left little over for the acquisition of property or wealth.

It seems rather futile to write of a "chromosomal corollary," "fitness," and "strong selective advantage" dependent on the transmission of the Y chromosome when so little has been settled at this point regarding its role other than in determining maleness. Even Selmanoff et al. (1975) admit that, in their first experiments, the specific behavior cited by Hartung was derived as an autosomal contribution.

Hartung is quite right in the assertion that "discrimination in favor of males has been characteristic of our species," but I cannot accept his suggestion that the roots of this behavior lie in an implied conscious awareness of inheritance patterns.

Reply[1]

by JOHN HARTUNG
c/o American Academy of Arts and Sciences, 165 Allandale St., Jamaica Plain Station, Boston, Mass. 02130, U.S.A. 2 VIII 76

As I read the comments I found myself frequently on the verge of blurting out an oral explanation that starts "No! no! no!, what I meant was. . . ." Having read and reread, however, I have come to the conclusion that my explanations are not sufficiently explanatory—and that most of the criticism follows from this, rather than from genuine disagreement. My writing (so I have been told by several colleagues) is cryptic and abrupt. I admit this, and can only say that it is improving—when I first wrote this paper (in 1973) it was 3½ typewritten double-spaced pages. I hope it is somewhat more comprehensible now, and I apologize for presenting a paper that requires a special amount of effort from its reader.

Far more important than my particular hypothesis is the premise it is based on: that natural selection can act upon any trait that is inherited across generations, whether that trait is physical or behavioral, genetically transmitted or culturally transmitted. The assumptions that behavior can be culturally determined, that culture is by definition heritable, and that natural selection can affect the frequencies of various culturally inherited behaviors are neither obvious nor generally accepted. They are, however, the "silent assumptions" upon which my argument is built. They are "silent" not because they fear scrutiny, but because very little can be said in their defense. This is not to say that they are defenseless; rather, they are, ultimately, self-evident in the same sense that natural selection is self-evident (see n. 8).

That only one species is capable of critical amounts of culturally determined behavior does not detract from culture's validity as a mechanism of inheritance. It is this, in fact, that makes us the most unique and exciting animals in the zoological kingdom. It is that fact, in turn, that makes anthropology the most unique and exciting subdiscipline in evolutionary biology.

I say that anthropology is exciting; perhaps I should say that it is *inherently* exciting, but its true character is subject to being phenotypically masked. Shortly subsequent to the work of Morgan and Tylor, the patterns of human behavior transmitted from one generation to the next via culture became a subject unto themselves. As is illustrated by many of the comments on my article, the cultural component of relative fitness has only begun to reemerge as an important principle. That reemergence (of natural selection in the minds of anthropologists) is making precarious progress, and it will only be on sound footing when we fully recognize the nature of natural selection—that it in no way justifies, sanctifies, or otherwise guarantees the qualitative value of its products. It only guarantees that its products have had relative reproductive success and that they will continue to have it until they become extinct.

To realize the natural-selection component of a disagreeable behavior is *not* tantamount to according it biological righteousness. Humans judge value by many criteria, but natural selection makes no value judgments—it is merely a name given to the realization that if one heritable trait is increasing at a faster rate than another (or decreasing at a slower rate) it will eventually predominate, regardless of the original ratio of the traits. *Fitness* is the term ascribed, ex post facto, to those qualities that cause relative reproductive success. The particular qualities that cause an individual to have relative reproductive

[1] I thank Irven DeVore, Peter Ellison, and Martin Etter (Department of Anthropology, Harvard University) for their efforts to encourage and temper my reply.

success are of no concern to natural selection—they are, by definition, *fit* if they accomplish that end. This is a tautology in the sense that any correct mathematical realization is tautologous. Natural selection is a mathematical realization rather than a "force" in the sense that gravity is a "force": i.e., in the absence of gravity, an apple will not fall to the ground, but the presence or absence of arithmetic will not affect the fact that 1 plus 1 equals 2.

With due respect for what natural selection has done for living matter, including *Homo sapiens*, I doubt that it will suffice as the arbiter of our future. Humans need a system in which *the qualities themselves* are judged by more than their relative rate of increase; for, as I have attempted to illustrate in this paper, major discrepancies can exist between human nature as we would like it to be and human nature as natural selection would have it. As K. Hepburn, head held high, put it to H. Bogart in *The African Queen*, "Nature, Mr. Allnutt, is what we are put into this world to rise above." I agree, and feel that it would be useful to know what we are up against—which is why we should look long and hard at Darwin's paradigm.

If anthropology is ever to gain a prescriptive aspect, it will have to put itself (culture and all) back into the context of evolution. If it fails to do so, it is anthropology, not natural selection, that will go the way of most species. The problem is that anthropology without culture is inadequate as an approach to its own subject matter, and cultural anthropology without the context of evolutionary biology is of unnecessarily limited importance. The heuristic value of the Lévi-Strauss/Radcliffe-Brown/Durkheim cultural-structural-functionalist approach is impressive, as is its erudite (if not intimidating) conceptual intricacy. Outside the framework of evolutionary biology, it seems to be a link in the causal chain that lies at a position slightly distal to the perspective of psychology and considerably proximal to the perspective of natural selection. This position is interesting in and of itself, but it does not address the question of adaptive value (relative fitness) of different culturally transmitted behavior patterns in different environmental circumstances. Although the cultural-structural-functionalist approach may not *claim* to be an evolutionary explanation, it is often thought to be one, and in this guise has something in common with The Emperor's New Clothes. The most unsettling part of this situation is that cultural anthropology *could* incorporate Darwinian considerations (avoiding Social Darwinism) and consequently enhance the importance and applicability of the knowledge already in its grasp.

This is not, however, the reason I favor an effort to bring anthropology back, as a unified field, into the context of evolutionary biology. It should not be brought back for the sake of the discipline or for the sake of academia, but for the sake of its subject. *H. sapiens* is facing a rather chancy evolutionary future, and anthropologists should be in a good position to enhance the efforts being made on man's behalf. I say "should" because the strength of our position will depend on our ability to close ranks within the field, and the size of our contribution will depend heavily on an ability to communicate with biology at large. There is no hope of edifying biologists without speaking their language—and their common tongue is Darwinian evolution.

With regard to issues surrounding man's evolutionary future, the dilemma boils down to this: the degree to which anthropologists fail to exert their potential influence will be a direct measure of the degree to which the influence of other disciplines will prevail. By comparison, I think the anthropological perspective warrants much attention—but the amount of attention paid will be only the amount we can command. Unfortunately, time has already been lost as a result of anthropology's disunity. An assertive effort is required if knowledge of man's evolutionary past is to have bearing on his evolutionary future. Unless we make this effort, those already involved will face even greater risks—as will we—by default.

My response to specific comments follows, in alphabetical order.

Abelson raises some points that crop up in several of the comments. I used the word "wealth," for lack of a more convenient label, to designate "any arbitrarily bestowable resource, ability, or status that might enhance the reproductive success of its possessor." It is important to grant my argument that definition. If one reduces "wealth" to "material wealth," my hypothesis becomes untenable. Among hunter-gatherers and tribal societies like the Yanomamö, preferential dispersal of "tools and knowledge" often goes to sons. Chagnon (1968) repeatedly describes the advantages of sons over daughters with regard to their learning situation. One might argue that fathers spend much time teaching sons to emulate their activities because males are inherently more capable of performing the tasks involved. I find that assumption comparatively dubious. My hypothesis would argue that fathers who give special attention to sons will rear sons who are better hunters and, by Yanomamö standards, more *fierce*. Such sons will be able to gain more wives and, consequently, more children. If the tendency toward son deference is heritable (culturally and/or genetically), there will soon be relatively more individuals who display it. If the situation were reversed, so that a "fierce" daughter could gain more husbands, the consequence of additional grandchildren could not follow to nearly the same degree—because multiple mates for females cannot dramatically increase their reproductive success. The Yanomamö also stand as an excellent example of a culture with a fairly low probability of paternity, significant attempts on the part of males to rectify this situation with regard to their own wives and maintain it with regard to other men's wives, and a strong mother's brother–sister's son relationship. I recommend Textor's statements 390/186 and 393/190 in this regard. I agree with Abelson that a female can greatly influence the genetic structure of her population, but her most powerful means of doing this is via *kin selection*, not personal reproductive success. My argument about son deference in the inheritance of wealth applies especially to female ancestors for just this reason.

A. Basu seems especially concerned over what he sees as my unconscious lending of credence to the inequitable social custom of patrilineal inheritance and my supposition that natural selection can affect sociocultural behaviors. I can only say that I hope we come to understand each other better some day, that any appearance of "lending credence" is the result of mistaken assumptions, and that, yes, there are even those who would "imagine a natural-selection . . . basis for the class system" (or, at least, a natural-selection component).

M. Basu's "biological dictionaries" apparently define fitness in relation to populations and not to individuals. Several commentators have criticized me for putting forth an argument that sees selection operating at the level of the individual rather than at the level of the group. We use different dictionaries. I recommend that they read Williams (1966), Levins (1970), Boorman and Levitt (1972, 1973), and Wilson (1975) on group selection. As to whether "hairy ears" are transmitted on the Y chromosome, I seem to have made an oversight.

Like Beals, I "am unable to understand how either sex could maximize its fitness compared to the other." My argument rests on "the between-sex difference of within-sex variance." As I noted, "total female reproduction must equal total male reproduction." I do not think we are in disagreement—and I probably could have explained this better.

Chiarelli wonders if "the entire subject does not need deeper analysis and solider factual support." I would be among the first to say that it does.

I disagree with Curtain's assertion that my argument

"requires us to believe that the Y chromosome carries a large complement of genes which assure the individual's ability to both gain and retain wealth." If such were the case, there would hardly be need of an attendant argument. The relative importance of the chromosomal corollary to patrilineage should not be judged by the space devoted to it—that space resulted from my own inability to explain it in less. It seems, even given this space, that I've failed to make it clear. The chromosomal corollary does not provide a substantive selective advantage so much as it provides an efficient *mechanism* for the spread of an advantage that can proceed from differential male-female reproductive variance. What I have referred to as "the mechanical effect" of this phenomenon is simply that a hypothetical gene coding for son deference will have a much higher probability of following a resultant "investment" if it is located on a sex chromosome. Conversely, if a gene predisposing an individual toward differentially endowing his son were located on an autosome, his wealth would go to his son, but the genetic determinant (not the cultural determinant) of the behavior would stand only a 50-50 chance of going with the wealth—so the fitness-enhancing value of the wealth (from the ancestor's genetic-interest viewpoint) would face a much higher risk of being dissipated.

I have no substantive disagreement with Edwards's comments.

Fix seems to have understood my paper exceptionally well. (I would like to conclude, therefore, that my explanations are indeed reasonable; but I suspect the case is that he had spent considerable time thinking about many of these issues long before reading the article.) I agree that "there is no evidence or necessity that Hartung's biological functional argument would have priority in explanatory force over sociological functional arguments." In this regard, I would reiterate a point with the help of a quote from West-Eberhard (1957:3): "The claim that a farmer who saves his brother's life benefits by the consequent increase of genetic alleles like his in the population, through kin selection, does not detract from the biological validity of the farmer's assertion that he did it to get help milking the cows." I also agree that the hypothesis is not adequately tested to "specify how much of the variation in inheritance systems [the] theory can account for." With regard to Fix's Point 1, I agree that "preferred polygyny" will not affect differential male/female reproductive variance if only one out of 230 males is in fact polygynous. I had never considered the point that "polygyny may increase female reproductive variance" when the variance is computed for both polygynously and monogamously married women. One could probably make an argument that *female choice* is the main selective pressure for monogamy.

I thank Korey for correcting my *Pc* notation error. This aside, I feel that group-selectionists who chastise others for epistemological shortcomings should not bother concluding with their "own intuition" about issues at hand.

Majumder seems to me to have understood my article more fully than he indicates—either that, or I do not know what is referred to by "the second part of the story."

I agree with Mavalwala's point that "a higher concentration of genetic coding can possibly be transmitted from a father to a daughter, rather than to a son" (although I do not see how it follows from crossing over), and I have addressed this point in the text. I do not claim to understand the relevance of the rest of Mavalwala's points, but I am intrigued by his opinion that patrilineal inheritance is "a bequest from the nonhuman primates."

Sharma seems to agree with my premise and my model. I do not think, however, that information on the Fords and Rockefellers would provide a test.

Szathmary's view that my argument is flawed because modern industrial societies do not transmit wealth on a strictly patrilineal basis indicates that I have failed to make my argument clear to him. Given the conditions that prevail today in such societies (e.g., little differential male/female reproductive variance), I find current levels of male favoritism rather (disconcertingly) impressive.

Wood's comments—from the comment about "fun-and-games" to "an implied conscious awareness of inheritance patterns"—cause me to wonder whose article she is commenting on. Wood sets up the straw-man of a rigid patrilineal inheritance line which excludes all outsiders (even other family members) from sharing benefits—rather easy to knock down. I am then accused of "understating the female investment in each offspring" when, in fact, the strength of my argument rests heavily on just this point—a high female/male parental investment ratio.

I would like to conclude by stating a few points which I should have made more explicit in the text: (1) I do not defend preferential treatment of males; rather, I call attention to this behavior as an example of the sort of problem that can arise when natural selection is the arbiter of human evolution. (2) My hypothesis in no way requires any degree of conscious motivation or realization on the part of individuals—I cited the example of clitoridectomy and conscious motivation as an unusual coincidence. (3) My argument centers on the *selective pressure* (or selective advantage) for male deference in the inheritance of wealth. This pressure is hypothesized to operate strictly at the level of the individual. (4) With regard to most other theories about the cause and consequence of patrilineal inheritance, my hypothesis would be more accurately viewed as complementary rather than competing. (5) Given a selective pressure, nature finds a means of release. In this case, the release mechanism can depend on cultural as well as genetic transmission of behavior. I suspect that both play some role, but that culture dominates. (6) The chromosomal corollary supplies a minor part of the pressure (relative to differential male-female reproductive variance) *and* a potential mechanical facilitator for a genetic component of the release.

References Cited

ALEXANDER, R. D. 1974. The evolution of social behavior. *Annual Review of Ecology and Systematics* 5:324–83.

BELSHAW, C. S. 1970. *The conditions of social performance*. London: Routledge and Kegan Paul.

BOORMAN, S. A., and P. R. LEVITT. 1972. Group selection on the boundary of a stable population. *Proceedings of the National Academy of Sciences* 69:2711.

———. 1973. Group selection on the boundary of a stable population. *Theoretical Population Biology* 4:85.

BORROW, M., P. L. PEARSON, and H. COLLACOTT. 1971. Paranucleolar position of the human Y chromosome in interphase nuclei. *Nature* 232:556–57.

BRASS, W., A. J. COALE, P. DEMENY, D. R. HEISEL, F. LORIMER, A. ROMANIUK, and E. VAN DE WALLE. 1968. *The demography of tropical Africa*. Princeton: Princeton University Press. [AGF]

CHAGNON, N. A. 1968. *Yanomamö: The fierce people*. New York: Holt, Rinehart and Winston.

CHAGNON, N. A., J. V. NEEL, L. WEITKAMP, H. GERSHOWITZ, and M. AYRES. 1970. The influence of cultural factors on the demography and pattern of gene flow from the Makitare to the Yanomamö Indians. *American Journal of Physical Anthropology* 32:339–50.

COTTERMAN, C. W. 1941. Relatives and human genetic analysis. *Scientific Monthly* 53:227–34.

CROW, J. F. 1954. "Breeding structure of populations," in *Statistics and mathematics in biology*. Iowa City: Iowa State University Press.

DARWIN, C. 1859. *On the origin of species by means of natural selection*. London: John Murray.

———. 1871. *The descent of man and selection in relation to sex*. London: John Murray.

DEVORE, I., and M. KONNER. 1974. "Infancy in hunter-gatherer

life: An ethological perspective," in *Ethology and psychiatry*. Edited by Norman F. White. Toronto: University of Toronto Press.

EISENBERG, J. F., and W. S. DILLON. 1971. *Man and beast: Comparative social behavior*. Washington, D.C.: Smithsonian Institution Press. [CCC]

EVERSLEY, D. E. C. 1965. "Population, economy and society," in *Population in history*. Edited by D. V. Glass and D. E. C. Eversley, pp. 23–69. London: Edward Arnold. [AEA]

FIX, A. G. 1976. *The demography of the Semai Senoi: A Malaysian "aboriginal" population*. Museum of Anthropology, University of Michigan, Anthropological Papers 62. In press. [AGF]

GOODY, J. 1969. Inheritance, property and marriage in Africa and Eurasia. *Sociology* 3:55–76. [EJES]

GOODY, J., B. IRVING, and N. TAHANY. 1971. Causal inferences concerning inheritance and property. *Human Relations* 24:295–314. [EJES]

HALDANE, J. B. S., and S. D. JAYAKAR. 1962. An enumeration of some human relationships. *Journal of Genetics* 58:81–107.

HAMILTON, W. D. 1964. The genetical evolution of social behaviour. *Journal of Theoretical Biology* 7:1–52.

HARTUNG, J. 1973. The mother's brother–sister's son controversy. MS.

———. 1976. An implication about human monogamy. MS.

HEMPEL, CARL G. 1959. "The logic of functional analysis," in *Symposium on sociological theory*. Edited by Llewellyn Gross, pp. 271–307. Evanston: Row, Peterson. [KAK]

HOGBEN, L. 1932. Filial and fraternal correlations in sex-linked inheritance. *Proceedings of the Royal Society, Edinburgh* 52:331–36.

HOOK, E. B. 1973. Behavioral implications of the human XYY genotype. *Science* 179:139–50.

JARVIE, IAN C. 1973. *Functionalism*. Minneapolis: Burgess. [KAK]

JOHNSTON, F. E., K. M. KENSINGER, R. L. JANTZ, and G. F. WALKER. 1969. Population structure of the Peruvian Cashinahua: Demographic, genetic, and cultural interrelationships. *Human Biology* 41:29–41.

KATZ, S. H., M. L. HEDIGER, and L. A. VALLEROY. 1974. Traditional maize processing techniques in the New World. *Science* 184:765–73.

KÖBBEN, ANDRÉ J. F. 1973. "Cause and intention," in *A handbook of method in cultural anthropology*. Edited by Raoul Naroll and Ronald Cohen, pp. 89–98. New York and London: Columbia University Press. [KAK]

KRMPOTIC, E., K. SZEGO, R. MODESTAS, and G. B. MOLABOLA. 1972. Localization of male-determining factor on short arm of Y chromosome. *Clinical Genetics* 3:381–87.

LEE, R. B., and I. DEVORE. 1968. "Problems in the study of hunters and gatherers," in *Man the hunter*. Edited by R. B. Lee and I. DeVore, pp. 3–12. Chicago: Aldine. [AEA]

LEVINS, R. 1970. "Extinction," in *Some mathematical questions in biology*. Edited by M. Gerstenhaber, pp. 77–107. Providence: American Mathematical Society.

LI, C. C., and L. SACKS. 1954. The derivation of joint distribution and correlation between relatives by the use of stochastic matrices. *Biometrics* 10:347–460.

MACCLUER, J. W., J. V. NEEL, and N. A. CHAGNON. 1971. Demographic structure of a primitive population: A simulation. *American Journal of Physical Anthropology* 35:193–207.

MCKUSICK, V. A. 1969. *Human genetics*. Englewood Cliffs: Prentice-Hall.

MALECOT, G. 1948. *Les mathematiques de l'heredité*. Paris: Masson.

MEGGITT, M. J. 1965. *Desert people: A study of the Walbiri Aborigines of Central Australia*. Chicago: University of Chicago Press.

MURDOCK, G. P. 1967. *Ethnographic atlas*. Pittsburgh: University of Pittsburgh Press.

NEEL, J. V. 1970. Lessons from primitive people. *Science* 170:815–22. [AEA, PPM]

ORANS, M. 1975. Domesticating the functional dragon: An analysis of Piddocke's potlatch. *American Anthropologist* 77:312–28. [AGF]

SALZANO, F. M. 1967. Demographic data on two Xavante villages: Genetic structure of the tribe. *American Journal of Human Genetics* 19:463–89.

SELMANOFF, M. K., J. E. JUMONVILLE, S. C. MAXSON, and B. E. GINSBURG. 1975. Evidence for a Y-chromosomal contribution to an aggressive phenotype in inbred mice. *Nature* 253:529–30.

STERN, C. 1960. *Principles of human genetics*. San Francisco: Freeman.

STEWARD, J. H. 1955. *Theory of culture change*. Urbana: University of Illinois Press. [AEA]

TEXTOR, R. B. 1967. *A cross-cultural summary*. New Haven: HRAF Press.

TRIVERS, R. L. 1972, "Parental investment and sexual selection," in *Sexual selection and the descent of man*. Edited by B. Campbell. Chicago: Aldine.

TRIVERS, R. L., and D. E. WILLARD. 1973. Natural selection of parental ability to vary the sex ratio of offspring. *Science* 179:90–93.

———. 1974. Parent-offspring conflict. *American Zoologist* 14:249–64.

VOGEL, F. 1971. "Mutations in man," in *Human populations, genetic variation, and evolution*. Edited by L. N. Morris, pp. 131–52. San Francisco: Chandler. [CRE]

WEST-EBERHARD, M. J. 1975. The evolution of social behavior by kin selection. *Quarterly Review of Biology* 50:1.

WILLIAMS, G. C. 1966. *Adaptation and natural selection: A critique of some current evolutionary thought*. Princeton: Princeton University Press.

WILSON, E. O. 1975. *Sociobiology*. Cambridge: Belknap Press.

WRIGHT, S. 1922. Coefficients of inbreeding and relationship. *American Naturalist* 56:330–39.

YUNIS, J. J. 1976. High resolution of human chromosomes. *Science* 191:1268–70.