CURRENT ANTHROPOLOGY Vol. 23, No. 1, February 1982

Polygyny and Inheritance of Wealth[1]

by John Hartung

Polygamy is contrary to the Law of Nature and Justice, and to the Propagation of the Human Race; for where Males and Females are in equal number, if one Man takes Twenty Wives, Nineteen Men must live in Celibacy, which is repugnant to the Design of Nature; nor is it probable that Twenty Women will be so well impregnated by one Man as by Twenty.

DR. JOHN ARBUTHNOTT, 1710

THE HYPOTHESIS to be tested here, that humans tend to transmit wealth to male descendants where polygyny is possible (Dr. Arbuthnott's assertions notwithstanding), follows from considering the difference in within-sex variance in reproductive success between males and females (Darwin 1859, 1871) and the fact that in polygynous societies multiple wives are acquired by men who can afford them. That is, since "a male's reproductive success can be greatly enhanced by mating with many females, whereas a female can only be impregnated approximately once per year, regardless of the number of her mates," and since "wealth is a decisive parameter for securing multiple mates in polygynous cultures," "variance in male reproductive success is not simply a reflection of genetic variance within the sex, but is due in part to extraneous variables such as nongenetically determined resource status. It follows that ancestors (both male *and female*) would maximize the reproductive-success value of their transferable wealth by leaving it to offspring of the sex upon which it has the highest probability of having the largest positive effect"—usually males (Hartung 1976:607, 608; 1977:336).

[1] I thank R. L. Trivers and E. O. Wilson for teaching me about evolution, and P. H. Harvey for the realization that in science you're wrong until you prove you might not be. I thank R. D. Alexander, P. van den Berghe, N. Chagnon, I. DeVore, M. Dickemann, P. Ellison, W. Irons, G. P. Murdock, J. Shepher, B. Smuts, and P. Whitten for valuable thoughts and encouragement.

JOHN HARTUNG is doing research at Downstate Medical Center (Department of Anesthesiology, State University of New York, Box 6, 450 Clarkson Ave., Brooklyn, N.Y. 11203, U.S.A.). Born in 1947, he was educated at the University of Pennsylvania (B.A., 1973) and at Harvard University (Ph.D., 1981). His research interest is human sociobiology. He has published "On Natural Selection and the Inheritance of Wealth" (CURRENT ANTHROPOLOGY 17:607–22), "An Implication about Human Mating Systems" (*Journal of Theoretical Biology* 66:737–45), "Light, Puberty, and Aggression: A Proximal Mechanism Hypothesis" (*Human Ecology* 6:273–98), "Genome Parliaments and Sex with the Red Queen," in *Natural Selection and Social Behavior*, edited by R. D. Alexander and D. W. Tinkle (New York: Chiron Press, 1981), "Paternity and Inheritance of Wealth" (*Nature* 291:652–54), "Might Cancer Be a Failed Response to Renegade Mitochondria?" (*Journal of Theoretical Biology*, in press), and, with P. Ellison, "A Eugenic Effect of Medical Care" (*Social Biology* 24:192–99).

The present paper was submitted in final form 3 IV 81.

In plainer English, if a set of parents left wealth to a son who could thereby afford an additional wife, that inheritance would, on average, increase their number of grandchildren more than if it were left to a daughter who was thereby able to gain an additional husband (see fig. 1). This does not assume that parents calculate the potential effect of their wealth on various possible heirs and act accordingly or that they are consciously motivated to enhance their long-range reproductive success. It does assume that if a pattern of behavior causes people to produce more descendants who also follow that pattern, the behavior will eventually come to predominate—or be naturally selected. This should hold regardless of the mechanism of transmission of the behavior from parents to children.

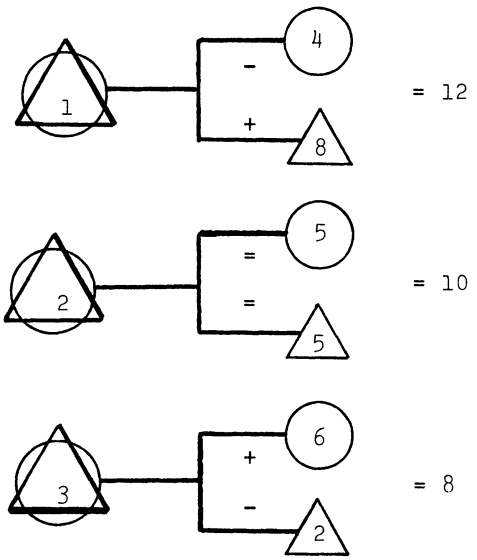

FIG. 1. A simplified model of the relationship between female/male reproductive variance, inheritance, and fitness. Given a society in which the standard deviation in number of offspring for males is 3, the standard deviation in number of offspring for females is 1, the mean number of offspring for males/females is 5, and the sole differentiating variable for number of offspring is the proportion of wealth inherited, and three couples, each with offspring as shown, where Couple 1 leaves all wealth to the son, Couple 2 divides the wealth evenly, and Couple 3 leaves all wealth to the daughter, and assuming that inheritance permits the attainment of one standard deviation in number of offspring over others of the same sex and noninheritance results in a corresponding one standard deviation decrease, the total number of grandchildren for each couple will be as shown at right.

AN ANALOGUE

An explanatory nonhuman analogue of this *polygyny → male bias* hypothesis can be drawn from blackbirds. Male blackbirds hold territories of varying quality, and females are attracted to an individual male by the quality of his territory (Orians 1969). Males with territories of high enough quality to put them over the "polygyny threshold" (Verner and Willson 1966) mate with two females per season, while males holding poor-quality territory go without (Pleszczynska 1978). Emlen and Oring (1977) have called this general phenomenon "resource polygyny" (see also Borgia 1979). Extending the analogy hypothetically, if parent blackbirds could enhance the quality of a male or female offspring's territory, they would be selected to enhance their male offspring's territory when the enhancement caused him to have an additional mate and them to have more grandoffspring. Thus, male bias in inheritance would be selected as a facultative response when polygyny is an option and the amount of heritable wealth is significant.

The hypothesis here is that such an effect can occur in humans and therefore a polygynous society's norm for inheritance will show a bias in favor of males. As with blackbirds, the hypothesis for humans assumes that variance in individual behavior is a facultative phenotypic response to variance in individual economic/mating conditions and that genetic variance across individuals or across cultures is irrelevant. That is, these behaviors (mate choice, heir choice, polygyny, etc.) are so important to reproductive success that they are unlikely to have significant heritability and very likely to have a range of appropriate phenotypic responses which each individual has the potential to display according to his/her circumstances (Hartung 1980).

HUMAN RESOURCE-DEFENSE POLYGYNY

Two general categories of polygyny are *resource-defense polygyny* and *mate-defense polygyny*. Mate-defense polygyny in humans would look something like the scenario one sees (or used to see) in cartoons in which a caveman drags women off by their hair while brandishing a large club to ward off anyone who might intervene (thereby "defending" his mates from access to/by other males). Substituting antlers or large canines for the club, this is a reasonable caricature for many mammals. The presumption necessary to my hypothesis, however, is that human polygyny, like polygyny in many birds, is resource-defense polygyny. That is, the hypothesis assumes that obtaining multiple wives requires substantial economic expenditure, or, as found by Clignet (1970:34), that "additional co-wives are a privilege reserved to individuals who initially hold higher than average positions."

Some indication as to whether this is the case can be gained by examining Murdock's (1967) variable "Mode of marriage—the prevailing mode of obtaining a wife." Two dichotomous modes of marriage are (1) "Bride-price or bride-wealth, i.e., transfer of a substantial consideration in the form of livestock, goods, or money from the groom or his relatives to the kinsmen of the bride" and (2) "Absence of any significant consideration, or bridal gifts only." Of the 1,170 societies in the punch-card version of Murdock's *Ethnographic Atlas*, 850 have one of these modes of marriage and are also coded for prevalence of polygyny.[2] Figure 2 indicates a strong positive relationship between polygyny and bride-price, supporting the assumption that human polygyny is resource-defense polygyny.

The problem with figure 2 is that since many of the cases cannot be assumed to be independent, a necessary assumption in any nonparametric analysis is violated. One solution is to use the Standard Cross-Cultural Sample (Murdock and White 1969)—a subset of 186 societies each of which represents one of the world's major culture areas. Of these societies, 111 are coded on both variables, and figure 3 indicates that the relationship evident in figure 2 also holds here.

Another solution to Galton's problem[3] is to correct for diffusion by counting language families instead of societies. The assumption here is that societies speaking languages from different language families are independent (see Whiting 1981). Accordingly, the number of cases in each whole *Atlas* cross-tabulation is reduced to the number of language families represented by those societies, and each cell is weighted by the proportion of each language family represented in it. For example, there are 331 Niger-Congo-speaking societies in the

MODE OF MARRIAGE

POLYGYNY	NO COST	BRIDE-PRICE
none	70 62.5%	42 37.5%
limited (<20%)	137 47.2%	153 52.8%
general (>20%)	41 9.2%	407 90.8%

Atlas

FIG. 2. Mode of marriage by polygyny for the whole *Atlas*. $N = 850$, chi-square = 192.9, $p \ll .001$, Cramer's $V = .48$, Gamma = .75.

MODE OF MARRIAGE

POLYGYNY	NO COST	BRIDE-PRICE
none	15 62.5%	9 37.5%
limited (<20%)	15 36.6%	26 63.4%
general (>20%)	10 21.7%	36 78.3%

standard sample

FIG. 3. Mode of marriage by polygyny for the Standard Sample. $N = 111$, chi-square = 11.4, $p < .01$, Cramer's $V = .32$, Gamma = .50.

[2] Polygyny can be derived from Murdock's code on family organization or from the variables Famorg and Marcomp in the SPSS punched version of the *Atlas*. See Murdock (1957) for the distinction between "limited" and "general" polygyny.

[3] "Galton's problem" is the issue of independence of cases—whether some societies in an analysis are being counted more than once because they have been arbitrarily or artificially subdivided, each subdivision being counted as a case.

punch-card version of the *Atlas*. The distribution of the Niger-Congo-speaking societies of figure 2 is as follows:

0	2
2	4
0	245

This entire group is reduced to one case, and, for the corrected analysis, the numbers entered into the table for this language family are the percentages of 1 that fall in each cell:

0	.0079
0079	.0158
0	.9684

This procedure is repeated for each language family represented, and the proportions in each cell are added to give the numbers upon which statistics are calculated.[4] Figure 4 supports the contention that the relationship indicated in figures 2 and 3 is not an artifact of cultural diffusion.

In addition to these nominally coded variables, data on the degree of polygyny (the percentage of females who share a husband) collected by J. Whiting and others in 1964 are available (see appendix). Although these data represent independent cultures from around the world, the criteria for independence are less rigorous than those for the Standard Cross-cultural Sample. Since, however, the analysis of these data is not nonparametric, noise from diffusion would be more likely to obscure a real relationship than to indicate a false one.[5]

MODE OF MARRIAGE

POLYGYNY	NO COST	BRIDE-PRICE
none	15.73 81.5%	3.56 18.5%
limited (<20%)	25.83 60.0%	17.20 40.0%
general (>20%)	9.16 35.7%	16.51 64.3%

corrected Atlas

FIG. 4. Mode of marriage by polygyny for the *Atlas* corrected by language family. $N = 88$, chi-square = 9.68, $p < .008$, Cramer's $V = .332$, Gamma = .544.

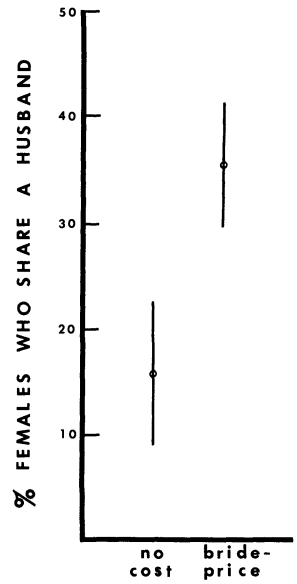

FIG. 5. Mode of marriage by ratio data on polygyny. No cost: $N = 34$, mean = 15.5, 95% confidence interval = 8.1 to 22.8; bride-price: $N = 84$, mean = 35.3, 95% confidence interval = 29.8 to 40.8.

Accordingly, while figures 2, 3, and 4 show strong evidence of an association between bride-price and polygyny, figure 5 presents the strongest indication of the degree of association.

Goody (1976) has argued that bride-price itself is often a form of inheritance or investment in sons. That is, in many societies the bride-price for a man's first wife is paid by his parents, who are effectively buying their son a spouse while providing themselves with an enhanced probability of vicarious reproductive success. In this sense, the correlation between bride-price and polygyny simultaneously supports the contentions that (1) human polygyny is resource-defense polygyny and (2) humans bias inheritance toward males under resource-defense polygynous conditions.

POLYGYNY → MALE BIAS

Murdock coded inheritance patterns separately for real property (land, house) and movable property (e.g., livestock, money) as follows:[6]

0 No information

1 No land rights/no inherited movable property/no rule governing the transmission of same

2 Matrilineal inheritance to a sister's son or sons

3 Inheritance by matrilineal heirs who take precedence over sister's son (e.g., younger brother)[7]

[4] The statistical problem with this correction is that a standard chi-square value calculated on the numbers in the finished table is an underestimate of the actual value. This is because large language families are very likely to be represented in more than one cell of the table. The effect of "splitting" many cases (each language family is treated as a single case) means that if the cases were randomly distributed (the theoretical expected distribution), skew in distribution of cases in the cells would be even less likely than if cases could not "split." This increases kurtosis and decreases variance in the expected distribution. Accordingly, if the observed chi-square value is below an acceptable significance level (as is the case here) the problem is not critical (one simply has a stronger result than actually indicated). However, if the chi-square value indicated a probability that was not quite significant, one could falsely fail to reject the null hypothesis. In other words, the procedure is safe (robust) but lacks power. A modified chi-square calculation is being developed to deal with this problem (see Tomberlin, Greene, and Hartung 1981).

[5] My presumption here is that while marriage system may be subject to diffusion, given polygyny, its actual degree (e.g., 9% vs. 14%) is not likely to result from cultural borrowing. Economic practices that lead to a particular range of degree of polygyny may diffuse, but the degree itself is the result of functional relationships. Accordingly, if the nominal/ordinal variable involved were distributed by diffusion (independently of a functional relationship with degree of polygyny), then variance around a mean for the ratio data would be increased rather than decreased—extending rather than shortening the confidence interval.

[6] In response to an inquiry, Murdock has said that he has no reservations about the accuracy of the 1967 data but feels that the codes are "too crude" (personal communication, June 1980). Further research would profit from refinement of these codes, especially 1, 3, and 6.

[7] See the inheritance codes listed by Textor (1966:112) and the HRAF *Atlas* codebook.

4 Inheritance by children, but with daughters receiving less than sons

5 Inheritance by children of either sex or both

6 Inheritance by patrilineal heirs who take precedence over sons (e.g., younger brother)

7 Patrilineal inheritance to son or sons

Two of these codes (2 and 7) indicate inheritance by males only, while two (4 and 5) prescribe at least some inheritance by females.[8] In order to maximize sample size and variable dichotomy, the following two categories were decided upon: *high-bias/males-only*, including societies coded 2 or 7 for both types of wealth, or one of these for each type, or one of these in combination with 1 (the most prevalent example of the latter being pastoral societies that transfer livestock to son[s] with no land at issue); and *low-bias/no-bias*, including societies coded 5 for both types of wealth, 5 for one and 4 for the other, or 5 for one and 1 for the other.[9] Figures 6–8 present cross-tabulations of low-bias/no-bias vs. high-bias/males-only by polygyny for the whole *Atlas*, the Standard Cross-cultural Sample, and the *Atlas* corrected by language family. Figure 9 presents the ratio data. All of these analyses indicate a positive relationship between male bias in inheritance and polygyny.

Though the relationship indicated by figures 6–8 is strong, it would be stronger if fewer cases fell in Cell *b*. That is, according to the hypothesis, one might expect even fewer monogamous societies to have a male bias in inheritance. However, "monogamy/polygyny" in these analyses refers to the marriage system, not the actual mating system. While it is reason-

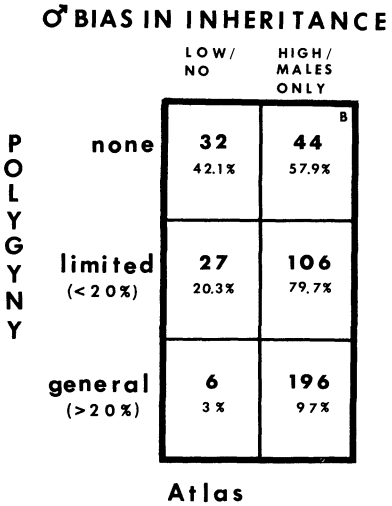

FIG. 6. Inheritance bias by polygyny for the whole *Atlas*. $N = 411$, chi-square = 66.5, $p \ll .001$, Cramer's $V = .40$, Gamma = .75.

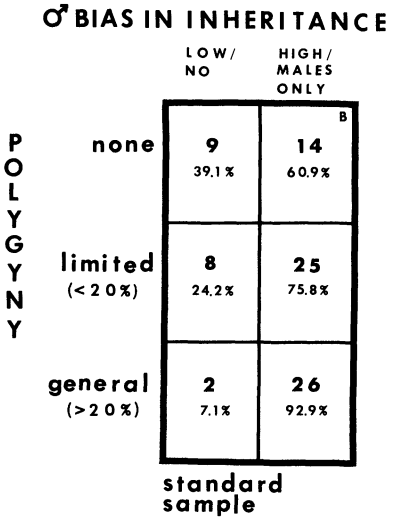

FIG. 7. Inheritance bias by polygyny for the Standard Sample. $N = 84$, chi-square = 7.5, $p < .03$, Cramer's $V = .30$, Gamma = .56.

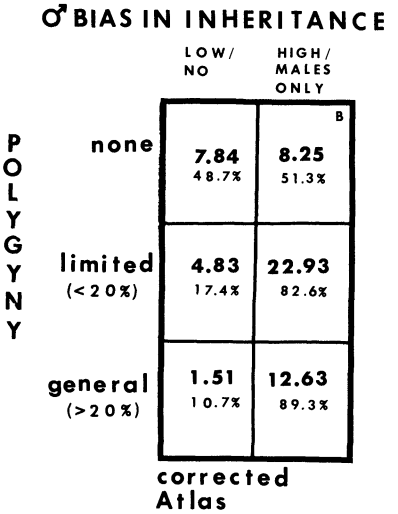

FIG. 8. Inheritance bias by polygyny for the *Atlas* corrected by language family. $N = 58$, chi-square = 7.33, $p < .026$, Cramer's $V = .355$, Gamma = .593.

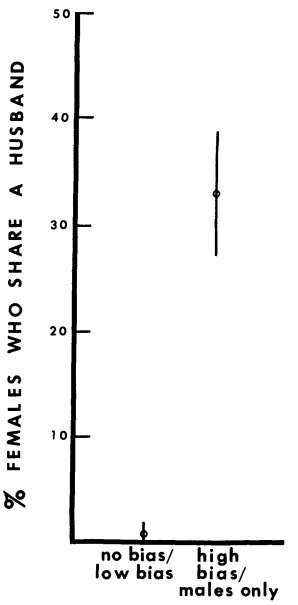

FIG. 9. Inheritance bias by ratio data on polygyny. No-bias/low-bias: $N = 8$, mean = 0.5, 95% confidence interval = −0.39 to 1.39; high-bias/males-only: $N = 69$, mean = 32.8, 95% confidence interval = 26.9 to 38.7.

[8] Code 2 can be left out of the analysis without significant effect, slightly strengthening the *Atlas* result (32 cases) and slightly weakening the Standard Sample result (3 cases). For a separate analysis of matrilineal inheritance, see Hartung (1981*b*) and references therein.

[9] Several other reasonable groupings were run, and all produced essentially the same results (some a bit stronger, some somewhat weaker, all in the predicted direction). Codes 6 and 3 usually mean inheritance by brother (see n. 7) and can be classified as high-bias/males-only, but since Murdock did not specify brother and since examining each of the nearly 200 societies coded 3 or 6 would be a major project, these data were not utilized (see also n. 8). Code 4 *for both types of property* was not used because "daughters less" is not sufficiently specific to indicate to which category such cases belong.

able to suppose that across-sex difference in within-sex variance for reproductive success (the index of sexual selection) is higher in societies with polygynous marriages, it is not safe to assume that the difference is negligible in societies without such marriages. Such societies can achieve considerable variance in male reproductive success through concubines or mistresses and other forms of institutionalized and/or noninstitutionalized, nonmarriage mating. Also, sequential monogamy (frequent divorce and remarriage) can increase male variance over female variance "if the remarriageability of a middle-aged male is higher than that of a middle-aged female and/or if the reproductive value of a middle-aged male is higher than that of a middle-aged female (which it is)" (Hartung 1977:336). (Reproductive value is a measure of expected future fertility [Fisher 1930].) Such factors may account for some of the societies that fall in Cell *b* of figures 6–8.

A logical extension of the hypothesis suggests that individuals in the lower economic strata of a society should transfer wealth to daughters, or without bias, regardless of the prevalence of polygyny. That is, if inherited wealth is not sufficient to put a male within reach of the "polygyny threshold" (in the marriage *or* mating sense), no increase in reproductive success will result. Dickemann (1979*a*) has investigated within-society splits in inheritance/investment norms in caste-stratified societies where high-status males are the limiting sex in the upper strata while females are the limiting sex only in the lower strata. Here lower-upper-stratum families (whose males cannot marry women from lower castes) pool their resources to accumulate a large enough dowry to permit one of their daughters/nieces to marry a male from the highest subcaste (hypergyny). In the upper upper strata, a high frequency of female infanticide and/or female celibacy lessens the probability of a daughter's marrying "down" (hypogyny) and taking family resources with her.

However, for most societies (as in mammals generally) females are probably the limiting sex and norms for inheritance of wealth are probably set primarily by those who have wealth —just as in our society norms for dress at the opera are set by those who go to the opera. If the amount of wealth some individuals transfer is so small as to be inconspicuous, that wealth can follow any pattern without establishing what an ethnographer would recognize as a norm—so individuals near the bottom of the economic order will usually be Code 1 (No property/no rule) for both types of wealth. (For an excellent case study of the interactions between wealth, polygyny [and/or serial monogamy], inheritance pattern, and reproductive success, see Irons [1976, 1979, 1980].)

OEDIPUS: A DERIVATIVE HYPOTHESIS

The critical variable for the polygyny → male bias hypothesis is the index of sexual selection—the amount by which variance in male reproductive success is higher than variance in female reproductive success. However, large as this across-sex difference in within-sex variance may be, the prevailing rule that mammalian females have comparatively low variance applies only to the offspring generation (Hartung 1981*a:* 393): "with any constant male variance across generations, the female variance must increase successively with reference to successive generations. That is, every male at the high end of the fitness distribution contributes to his female parent's F_2 [grandparent-generation] reproductive success. Accordingly, while that female may have been near the mean for number of offspring, she will be at the high end of the higher variance fitness curve for number of grandoffspring. This will necessarily follow whether the additive heritability of fitness is large or non-existent." Put more plainly, every highly successful male has a mother, and every mother with highly successful sons has an extraordinary number of grandchildren.

The point here is that females also have a means of attaining extraordinary reproductive success (or, more precisely, extraordinary vicarious reproductive success, or inclusive fitness [Hamilton 1964]). The critical difference between males and females, in this regard, is that males can have this success directly (by having many mates/offspring), but females must do so indirectly (by having sons that have many mates/offspring). Therefore, given a family with considerable resources (of the sort that could be spent on bride-price and/or other means of obtaining mates), one should expect mother and son to side against father over the issue of resource expenditure. That is, if resources can be either (1) conserved and passed on to the son so that he can gain multiple mates or (2) spent by the father to gain additional mates for himself, mother and son (and mother's mother[10]) should strongly prefer the first strategy.

Freud hypothesized that sons are sexually attracted to their mothers and that antagonism between fathers and sons stems from potential sexual competition for mother. While there is much evidence (e.g., from a 1977 Gallup poll) indicating that mother-son bonds are stronger and more positive than father-son relationships, data on incest indicate that father-daughter incest and even brother-sister incest are orders of magnitude more frequent than mother-son incest (which is practically nonexistent, despite the several-year period during which adolescent sons are physically dominant over their mothers and despite the reasonably frequent situation of adolescent sons in fatherless households [see Herman 1977]). Even father-son incest is more frequent than mother-son incest. Perhaps the classic family conflict perceived by Freud and interpreted by him as the "Oedipus complex" does stem from sexual competition between father and son, but not over mother—rather, over which family male will be a resource-defense polygynist.

CAVEAT AND CONCLUDING REMARKS

> Culture is adaptive or "functional," subserving the basic needs of its carriers and altering through time by a sort of mass trial-and-error in a process which is truly evolutionary. [Murdock 1949:xii]

It has been assumed throughout this paper that humans behave as if influenced by the legacy of behaviors that served the reproductive success of their ancestors. Murdock was following the lead of Sumner and Keller (1927) when he wrote that culturally transmitted behavior is adaptive and that change in such behavior is the consequence of a process analogous to the process proposed by Darwin for genetic change.

That most cultural differences are differences in learned behavior, and that they result from differences in socialization, do not detract from their potential to be adaptive in a Darwinian sense. Like genes, culture is a mechanism that transmits instructions down family lines. It follows that if one culturally transmitted behavior causes its bearers/transmitters to have higher reproductive success than another, it will increase in frequency. Unlike genes, culture can also spread laterally across individuals within a given generation—or, because of lateral spread, fail to decrease when it has a relatively negative effect on individual reproductive success. So culturally transmitted behaviors can spread comparatively quickly, decrease comparatively slowly, or even be perpetuated by "socio-cultural, economic, and political factors . . . that decrease the individual and inclusive fitness of the individuals who practice them" (Beall and Goldstein 1981:11). In short, culture is comparatively ductile, and this ductility means that its carriers are subject to faster rates of evolution and/or extinction (the last Shaker died last year).

[10] This is perhaps a contributing factor in mother-in-law avoidance.

If humans tend to (1) invent new behaviors that are adaptive and (2) copy or avoid new behavior according to its adaptive merits (as opposed to simply reproducing or failing to reproduce), then adaptive culturally transmitted behavior should arise more frequently and spread more rapidly than adaptive genetically transmitted behavior. My own presumption is that both of these conditions hold and that the Lamarckian attributes of cultural evolution account for the conspicuous rapidity of human evolution. How people might judge, a priori, the potential adaptiveness of a novel behavior is a subject for investigation in itself (largely within the purview of psychology, I presume), as is how such behaviors spread across individuals and interact with general evolution (see Pulliam and Dunford 1980, Boyd and Richerson 1980, Cavalli-Sforza and Feldman 1981, Lumsden and Wilson 1981). However, the subject here is not the mechanics of culture per se, but the adaptive compatibility of particular combinations of cultural behaviors.

The data presented support the hypotheses they are analyzed to test, and in a general way they lend support to the Sumner-Keller-Murdock view of the relationship between culture and natural selection. It is important to keep in mind what is meant (and not meant) by the phrase "truly evolutionary." That is, it is important to recognize the nature of adaptation by natural selection—that it operates primarily at the level of the individual, that most individual lines become extinct, that most social groups become extinct, and that most species become extinct.

Natural selection does not insure the future success of its products—it only insures that its products *have had* relative reproductive success. It does not operate by design, but, through an effect like that of Adam Smith's "invisible hand" in economics, it can give rise to populations of individuals whose interactions are sufficiently coordinated to give the finished structure an appearance of design—or even the appearance of having evolved independently of its most elemental components. Natural selection does not have foresight, but it can cause the evolution of organisms that do have foresight. Whether it can generate an organism that has enough foresight to evolve by design remains to be seen.

Arbuthnott was wrong to equate *Justice* with *the Law of Nature*. Hepburn came closer to the truth when she put it to Bogart in *The African Queen:* "Nature, Mr. Allnutt, is what we are put into this world to rise above." I hope that investigating the influence of natural selection on our cultural legacy will facilitate changing it when major discrepancies exist between human nature as we would like it to be and human nature as we find it.

APPENDIX: DATA ON DEGREE OF POLYGYNY

TABLE A

SOCIETIES CODED FOR DEGREE OF POLYGYNY BY WHITING ET AL. AND FOR INHERITANCE BIAS AND/OR MODE OF MARRIAGE BY *Ethnographic Atlas*

NAME	*EA* No.	% FEMALES WHO SHARE A HUSBAND	INHERITANCE BIAS[a]	MODE OF MARRIAGE[b]
Alorese	IC02	22	0	1
Amba	AE01	49	2	0
Andamanese	EH01	0	0	2
Aranda	ID01	59	2	0
Arapaho	NE09	9	0	2
Arapesh	IE03	46	2	2

[a] 0 = code not used; 1 = low-bias/no-bias; 2 = high-bias/males-only.
[b] 0 = code not used; 1 = bride-price; 2 = no cost.

TABLE A—*Continued*

NAME	*EA* No.	% FEMALES WHO SHARE A HUSBAND	INHERITANCE BIAS[a]	MODE OF MARRIAGE[b]
Armenians	CI10	0	0	1
Ashanti	AF03	72	0	1
Atayal	IA01	0	2	1
Aymara	SF02	0	2	2
Azande	AI03	57	0	1
Baiga	EG09	66	0	1
Bali	AE49	12	2	1
Bari	AJ08	30	2	1
Baya	AI07	40	2	1
Bete	AF07	81	0	1
Bhil	EF05	13	2	1
Bijogo	AG18	5	0	2
Bulgarians	CH05	0	0	2
Cayapa	SF03	0	0	2
Chiricahua	NH01	18	0	2
Chukchee	EC03	49	2	0
Dobu	IG05	0	2	0
Dzem	AE40	61	2	1
Egyptians	CD02	7	0	1
Falasha	CA31	0	0	2
Fang	AE03	42	2	1
Fipa	AD19	46	0	1
Ganda	AD07	44	2	1
Gheg	CE01	41	2	1
Gilyak	EC01	3	2	1
Gujarati	EF09	2	2	1
Gusii	AD12	63	2	1
Hausa	CB26	59	0	1
Havasupai	ND03	19	2	0
Hehe	AD08	59	0	1
Iban	IB01	0	1	2
Ifaluk	IF04	0	0	2
Iranians	EA09	1	0	1
Irish	CG03	0	2	0
Iroquois	NG10	0	0	2
Jivaro	SE03	90	2	0
Jordanians	CJ06	22	0	1
Jukun	AH02	5	2	1
Kachin	EI05	2	2	1
Kadara	AJ19	64	2	0
Kagoro	AH20	55	2	1
Kapauku	IE01	39	0	1
Katab	AH01	68	2	0
Kazak	EB01	67	2	1
Khasi	EI08	0	0	2
Khmer	EJ05	5	0	1
Kikuyu	AD04	32	2	1
Kissi	AF02	17	2	1
Konso	CA01	76	0	2
Koryak	EC05	24	2	0
Kurd	CI11	7	0	1
Kurtatchi	IG03	50	0	1
Kutenai	ND07	19	2	2
Kwoma	IE12	55	2	1
Lapps	CG04	0	0	2
Lepcha	EE03	35	2	1
Lesu	IG04	21	0	1
Lolo	ED02	5	2	1
Lovedu	AB14	49	0	1
Lozi	AB03	66	2	0
Luba	AE06	49	0	1
Luo	AJ06	62	2	1
Macassarese	IC01	8	0	1
Malays	EJ08	5	0	1
Mamvu	AI05	47	0	1
Mapuche	SG02	64	2	1
Maria Gond	EG03	4	0	1
Marquesans	IJ03	0	1	0
Marshallese	IF03	0	0	2

TABLE A—*Continued*

Name	*EA* No.	% Females who Share a Husband	Inheritance Bias[a]	Mode of Marriage[b]
Mbundu	AB05	45	2	1
Mende	AF05	79	0	1
Minchia	ED08	14	2	1
Mossi	AG47	42	2	1
Nambicuara	SI04	55	0	2
Nandi	AJ07	18	2	1
Naskapi	NA05	29	2	2
Ndob	AE55	61	2	1
New England	CF01	0	1	2
Ngonde	AD16	70	0	1
Ngoni	AC09	29	0	2
Nuer	AJ03	75	2	1
Nupe	AF08	82	0	1
Nyakyusa	AD06	68	0	1
Nyoro	AD02	66	2	1
Ojibwa	NF01	13	2	2
Okinawans	ED07	0	2	0
Otoro	AI10	77	2	1
Paiute	ND22	18	0	2
Palaung	EI18	29	0	1
Papago	NI02	49	2	2
Pawnee	NF06	54	0	2
Pondo	AB10	21	2	1
Quinault	NB25	13	2	0
Riffians	CD03	46	2	1
Rundi	AE08	33	2	0
Sandawe	AA06	20	0	1
Semang	EJ03	3	1	2
Seri	NI04	0	0	1
Shawiya	CD08	0	2	1
Shilluk	AI06	37	2	1
Shluh	CD05	0	0	1
Siamese	EJ09	1	1	0
Siriono	SE01	38	0	2
Siuai	IG01	28	0	1
Siwans	CC03	5	0	1
Songhai	CB03	5	0	1
Sonjo	AD39	18	2	1
Sotho	AB08	18	2	1
Suku	AC17	41	0	1
Swazi	AB02	37	2	1
Tallensi	AG04	62	0	1
Tapirape	SD02	0	0	2
Telugu	EG10	9	2	0
Temne	AF57	49	0	1
Teso	AJ01	45	2	1
Tewa	NH11	0	1	2
Tibetans	EE04	0	2	0
Timbira	SJ04	0	1	0
Tiv	AH03	52	2	0
Tiwi	ID03	85	0	1
Toda	EG04	0	2	0
Tonga	II12	35	0	2
Trobrianders	IG02	39	2	1
Trukese	IF02	0	2	2
Tswana	AB13	21	2	1
Tuareg	CC09	0	0	1
Tubatulabal	NC02	0	0	1
Vedda	EH04	0	2	0
Vugusu	AD41	30	2	1
Wogeo	IE04	53	2	0
Wolof	CB02	61	0	1
Yanzi	AC26	54	0	1
Yao	AC07	30	0	2
Yoruba	AF06	29	0	1
Zapotec	NJ10	0	1	2
Zuni	NH04	0	0	2

TABLE B

SOCIETIES CODED FOR DEGREE OF POLYGYNY BY WHITING ET AL. AND LACKING CODES FOR INHERITANCE BIAS AND MODE OF MARRIAGE

Name	*EA* No.	% Females who Share a Husband
Apinaye	SJ07	0
Balinese	IB03	35
Bemba	AC03	52
Camayura	SI05	18
Carib	SC03	37
Cuna	SA01	2
Dogon	AG03	24
Kaonde	AC32	33
Kaska	NA04	0
Klamath	NC08	35
Koma	AI46	5
Konkomba	AG10	57
Kung	AA01	9
Lamba	AC05	9
Luvale	AC11	26
Mambila	AH04	18
Manus	IG09	11
Maori	IJ02	2
Mataco	SH01	5
Mbuti	AA05	10
Murngin	ID02	57
Navaho	NH03	13
Ndembu	AC06	26
Nootka	NB11	23
Serbs	CH01	0
Tanala	EH03	49
Tehuelche	SG04	2
Tikopia	II02	7
Trumai	SI02	22
Yagua	SE04	0
Yaruro	SC02	17

TABLE C

SOCIETIES FOR WHICH THE TWO DATA SOURCES ARE IN CONFLICT OR POTENTIAL CONFLICT

Name	*EA* No.	% Females who Share a Husband	Inheritance Bias[a]	Mode of Marriage[b]
Ainu	EC07	0	0	2
Ambo	AB19	0	0	1
Ambonese	IC11	3	2	1
Bajun	AD01	5	1	1
Bontok	IA08	5	1	0
Burmese	EI03	5	1	0
Chenchu	EG01	4	2	1
Chin	EI19	0	2	1
Comanche	NE03	0	0	2

NOTE: Of these 41 cases, 14 are rated monogamous by the *Atlas* but considered to show 1–5% of females sharing a husband; 25 are rated polygynous by the *Atlas* but judged to have no females sharing a husband. (Since the Whiting group's codings were sometimes based on samples smaller than 100 marriages, the latter are likely to be cases in which polygyny is permitted but the degree of polygyny was too low to be detected.) The remaining cases, Copper Eskimo and Inca, are rated monogamous by the *Atlas* but considered by Whiting et al. to have 10% and 27% of females sharing a husband. None of these were used in the analysis.

[a] 0 = code not used; 1 = low-bias/no-bias; 2 = high-bias/males-only.

[b] 0 = code not used; 1 = bride-price; 2 = no cost.

TABLE C—*Continued*

Name	*EA* No.	% Females who Share a Husband	Inheritance Bias[a]	Mode of Marriage[b]
Copper Eskimo	NA03	10	1	0
Daka	AH29	5	0	0
Dorobo	AA02	5	0	1
Eastern Pomo	NC18	0	2	2
Hottentots	AA03	0	2	0
Inca	SF01	27	2	2
Ingassana	AI04	5	0	0
Javanese	IB02	0	1	0
Kalmyk	CI01	5	2	0
Karen	EI07	5	1	2
Koreans	ED01	2	2	2
Lau	IH04	0	0	0
Lebanese	CJ07	1	2	2
Mbugwe	AD05	5	2	1
Merina	EH02	0	1	0
Miao	ED04	0	2	1
Miskito	SA09	0	0	0
Nicobarese	EH05	0	1	2
Northern Pomo	NC17	0	0	2
Omaha	NF03	0	2	0
Samoans	II01	0	0	0
Sanpoil	ND04	0	0	0
Tarasco	NJ08	0	2	2
Terena	SH02	0	0	2
Tupinamba	SJ08	0	0	0
Tzeltal	SA02	0	0	0
Yahgan	SG01	0	0	0
Yapese	IF06	5	0	2
Yokuts	NC03	0	0	2
Yukaghir	EC06	0	2	0
Yurak	EC04	0	0	1
Yurok	NB04	0	0	1

[a] 0 = code not used; 1 = low-bias/no bias; 2 = high-bias/males-only.
[b] 0 = code not used; 1 = bride-price; 2 = no cost.

Comments

by Mildred Dickemann
1728 Allston Way, Berkeley, Calif. 94703, U.S.A. 11 viii 81

Hartung's analysis is a welcome contribution to our efforts to illuminate human behavior by means of behavioral biology. However, the reanalysis of cross-cultural data, while resourceful, is in my view plagued by the taxonomic and conceptual problems which have beset many such efforts. Hartung seeks to establish an association between "polygyny" and variables representing patrilineal inheritance, thereby justifying the conclusion that "human polygyny is resource-defense polygyny." Success is contingent upon appropriate definition of variables and the validity of the data bases employed.

Biologists' "polygyny" refers to matings (copulations) during a season or lifetime; Murdock, as Hartung notes, referred to marriage only. Hartung grants that other forms of multiple mating than marital polygyny may result in high male reproductive success, but this admission goes to the heart of the research design: unless they too are tested for association with male-biassed inheritance, he has demonstrated only that *some* forms of human polygyny are resource-associated. Human males engage in several forms of polygynous *mating*, comprising a gradient of increasing anticipated paternal investment in offspring (casual copulation and prostitution, liaison, mistress/concubine, wife). Several forms may be employed simultaneously or serially by an individual male. But other types of mating are also associated with male-biassed inheritance, notably (marital) polyandry and monogamy. How do these associations with resources affect Hartung's phrasing of the reproductive-success theorem? Additionally, our species currently engages in mate-defense polygynies: rape, wife capture in warfare, kidnapping and sale of women. Some of these forms involve *no* resources. Further, the most extreme "resource-defense" matings are precisely those with the most elaborate forms of "mate defense" (i.e., female claustration, veiling, and mutilation), protecting females at once from copulations of other males and from escape. Human forms, then, may be "mixed." How do traditional anthropological taxonomy and *Atlas* codings reflect these realities? Finally, Hartung recognizes status differences in patterns of polygyny and inheritance (though apparently not in *norms* of wealth transmission) which the Murdock-derived codes do not reflect. Which class is coded, in which society, for which variable?

As for "mode of marriage" (i.e., marital exchange), why bride-price is an index of male-biassed inheritance, and therefore of resource-defense polygyny, is nowhere explained. Resource *defense* does not imply resource *expenditure* to acquire wives. I believe this confusion derives both from Murdock's taxonomy and from Hartung's definition of resource-defense polygyny. Murdock's code should be *tri*chotomous: "bride-price," "absence," and "bridal gifts only" (i.e., dowry). Societies with dowry as the high-status norm are exactly those with the most intense (number of females per male) polygynous marriage, concubinage, and prostitution and the most intense mate defense (claustration). In them, females and their families engage in significant economic sacrifice and competitive striving to achieve association of their unborn offspring with the rich resources of high-status patrilines. All this Murdock conflates with "absence." If *both* bride-price and dowry correlate positively with polygyny, the equation of defense with expenditure is false. Hartung's resource-defense formulation needs clarification.

Regarding "inheritance," my scepticism concerning *Atlas* classification and coding seems confirmed by Hartung's table C and Note. Are inheritance and marriage-payment codings more trustworthy than those for polygyny that Whiting and coworkers felt required recoding? My own experience with these codes is that they are too inappropriate taxonomically and too invalid ethnographically to serve as more than a source for hypothesis formation.

These comments may seem overcritical. I believe they address the fundamental question behind Hartung's efforts, namely, "why polygyny?" Hartung states that male-biassed inheritance will occur "when polygyny is an option and the amount of heritable wealth is significant." What is the meaning of "option"? Form of the hypothesis, terminology, and consequent test all prevent the framing of predictive statements regarding the appearance of polygyny (of any given form) in one society and not another. There are, I believe, factors missing in this attempt to apply the Verner-Willson-Orians polygyny threshold to humans: the great capacity of human offspring to profit (in reproductive-success terms) from parental, including paternal, investments and the capacity of our species to design and defend production and inheritance systems lasting far beyond a single lifetime. These capacities permit choices between resource-defense (investment) polygyny (i.e., concubinage and marriage with promissory patriline investment) and nonresource-defense polygyny. They allow choices between low investment in numerous offspring and high investment in few offspring (*r*- vs. *K*-selection strategies) by an individual male in response to current and anticipated economic-environmental events. A more refined hypothesis must specify attributes of both environment and resources which make resource-defense polygyny adaptive or nonadap-

tive, on the one hand, and make clumping of resources in association with specific males possible, on the other. Given such a hypothesis, we can identify diachronic cases in which these attributes undergo change, thus testing the causal relationship of the variables. Rather than Hartung's "polygyny → male bias," I suspect the causal chain will ultimately appear more as follows: (resources controllable → patrilineal inheritance) + (resources uneven, unpredictable → intense male competition → short male tenure + high adult male mortality) → (high resource-defense polygynies in controlling males + high nonresource-defense polygynies in noncontrolling males). All of these relationships must of course be phrased in cost/risk-benefit terms for both males' and females' patrilines. I believe this elaboration accords well with the theory of mating systems developed by behavioral ecologists in recent years (see esp. Borgia 1979, Emlen 1980, Emlen and Oring 1977; my own discussion is in Dickemann 1979*a*, *b*, 1981).

In concluding, I applaud Hartung's Oedipal hypothesis. If Freud's theoretical schemas have not withstood criticism, his identification of the nuclear family as a central stage on which the drama of sexual and reproductive competition is enacted must eventually be acknowledged by those interested in biobehavioral theory. Hartung's insightful proposition regarding Oedipal conflict, like Trivers's (1974) regarding parent-offspring conflict, is a forerunner of a reinterpretation of Freudian literature with profound implications for both theory and therapy.

by UMBERTO MELOTTI
Istituto di Studi Politico-Sociali dell'Università di Pavia, Italy. 3 VIII 81

Hartung's paper is very interesting, and his concept of "reproductive value" is particularly refreshing. This concept, in fact, may help to explain other institutions as well, for instance, the levirate of the *youngest* brother and the sororate of the *youngest* sister, which are not satisfactorily interpreted in economic terms alone. Of course, explanation in terms of reproductive value must be integrated with an analysis in terms of kin selection (Melotti 1979, 1981*a*, *b*). Again, the fact, pointed out by Hartung, that the reproductive value of males varies less with age than that of females (so that "the reproductive value of a middle-aged male is higher than that of a middle-aged female") may explain why matrilateral cross-cousin marriage is often preferred to patrilateral. In fact, as Fox (1967:221) has maintained, matrilateral cross-cousin marriage seems to be preferred (or even to be the only one possible) simply because women usually marry younger than men.

There is, however, a quite different sociobiological reason for the fact that polygamy far more frequently assumes a polygynous form than a polyandrous one. It is only in polygamy that the function of defending the group—in primates usually performed by the males, for obvious biological reasons—coincides with their interest in protecting the children as carriers of genes identical by descent to their own. Polygyny (unlike polyandry) strengthens by natural selection the spirit of sacrifice (i.e., the altruism) of males in the same measure as monogamy (Melotti 1979, 1981*b*).

by LEOPOLD POSPISIL
Peabody Museum of Natural History, Yale University, New Haven, Conn. 06520 U.S.A. 26 VI 81

The essence of Hartung's logical, thought-provoking paper is what I would call a macrocosmic argument. Because data on one culture of the sample, that of the Kapauku Papuans, derive from my own research and support the author's hypothesis, I feel justified in presenting critical remarks.

The main hypothesis is approximately as follows: Man's cultural behavior is adaptive. Therefore, adaptive behavior will predominate in cultural transmission to descending generations. Behavior that enhances reproductive success is adaptive and will be perpetuated, not necessarily because of conscious effort by the parents, but because the more numerous progeny will continue the behavior learned in their family. Since the reproductive success of a female is not dependent on marriage rules, but a male can multiply his progeny by marrying several wives, behavior causing polygyny is adaptive and will predominate wherever polygyny is permitted.

Multiple wives are presumably acquired through bride-price, which requires initial wealth from the groom or his supporting family. Since this often comes through inheritance, there should be a high correlation between polygyny and inheritance favoring males. On the basis of the quantitative evidence presented it seems that male-biased inheritance that provides for bride-price is a causal factor in the existence of polygyny. But is it really? One may ask about the 25% of societies that have polygyny and male-biased inheritance but no bride-price (89.3% of polygynous societies with male-biased inheritance minus 64.3% of polygynous societies with bride-price). There is, it seems, another possible interpretation: that a more basic factor that exists in a culture and simultaneously affects many of its aspects *causes* both male-biased inheritance and polygyny. Indeed, that this may be so is supported by a statistical analysis in one of my unpublished papers which shows a very high correlation between male-biased laws of inheritance and Omaha kinship terminology (Pospisil 1954).

On the basis of a microcosmic inquiry one may cast doubt upon several basic assumptions of the article. First, adaptability is a relative concept. A behavior that is adaptive in the short run may in the long run prove maladaptive. Successful cattle, goat, or sheep breeding may result in overgrazing, exploitation of cheap energy may cause pollution of the atmosphere, etc. Second, it is well established that adaptive behavior does not always become culturally dominant. If it did, we would be hard pressed to explain the internal decay of civilizations and such detrimental behaviors as cause the spread of kuru and other diseases that sometimes threaten a social group with extinction. Behavior may be adopted not only because of its objective advantages, but also because of the prestige of the introducing agent, the enforcement power of a ruling authority or class, the kind of contact situation between groups, etc.

Third, the contention that a mother and her son would oppose her husband's spending of his fortune upon himself and prefer to save the resources for the son's inheritance is contradicted by empirical evidence from the Kapauku culture. There a woman urges her spouse to spend money on pigs and an additional wife; she even has a legal right to divorce her husband if she can prove that he has the money for bride-price and refuses to remarry. Finally, my quantitative Kapauku data show that a second wife is not only a source of prestige for her husband, but primarily an important investment in production. Consequently, lending money for a bride-price to be paid by a relative or friend is not only common, but the main source of funds for this purpose. A father's contribution, although often important, may not amount in most cases to more than 35%. Inheritance from a deceased father is indeed unimportant in this respect, because usually a successful young man becomes polygynous while his father is still alive. Jokagaibo already had five wives while his father and grandfather were still living, and both were, economically speaking, failures in their lives. Indeed, a majority of rich and polygynous Kapauku are self-made men rather than heirs to fortunes. Behavior that leads to wealth and polygyny is taught by a rich Kapauku

not only to his sons, but also to *ani jokaani*, adopted apprentices from poor homes. The latter are usually eager to learn, while the former take wealth for granted and learn little from their wealthy father.

All this does not mean that I generalize on the basis of one case. I am only pointing out that a logical argument supported only by statistics from the *Ethnographic Atlas* may not be the only one possible and, indeed, may not be correct. Correlation reveals only a relationship; conclusive causal argument must derive from an in-depth analysis of the relevant societies.

by EUGENIE C. SCOTT
Department of Anthropology, University of Kentucky, Lexington, Ky. 40506, U.S.A. 12 VIII 81

Hartung's central proposition that in polygynous societies inheritance of wealth will be biased towards male offspring is not at variance with expectation, given parental-investment theory, and appears supported by the data presented. I have a couple of minor disagreements with this otherwise interesting piece.

First, I do not think the economic basis which I agree underlies mate selection in humans is most usefully described as "resource-defense polygyny." Emlen and Oring's concept recalls a patchy environment wherein males compete to hold the best territories. Females then choose the males, polygynously if "a female mating with an already paired male on a superior-quality territory will have equal or better reproductive success than if she mated with an unpaired male occupying a poorer-quality territory" (Emlen and Oring 1977:217). This connotes an image of a male passiveness to female choice that is not directly applicable to *H. sapiens*. An argument can be made for different societies as to whether females choose or males choose, and the territorialism found in the animal societies characterized by resource-defense polygyny is at best an inexact metaphor for human economic resources. The concept is unnecessary to Hartung's point about the relationship of wealth, polygyny, and inheritance. If it is necessary to point out the economic base of polygyny (and I think it is already an accepted idea, not requiring additional proof), then a new phrase or term should be coined rather than overextending one appropriately used in animal population studies but lacking precision with humans.

Another small disagreement is with the blackbird analogy, which, like resource-defense polygyny, does not add clarity to Hartung's point. Actually, under resource-defense polygyny parent blackbirds *could* increase their inclusive fitness, if not by improving the territory held by a son then by helping him defend a good one. Natural selection has not resulted in this strategy, however, and so the blackbird analogy is not appropriate.

I don't want to sound more negative than I feel, since I am pleased to see this analysis, but it seems to me that Hartung could have pushed beyond this initial analysis of polygyny/monogamy vs. low/high male inheritance. For example, Hartung explains what he considers to be anomalously high values in Cell B of figures 6, 7, and 8. His explanations are reasonable, but do the societies in those cells have these characteristics? The data can be searched out.

Inclusive-fitness theory plus higher male variance in fertility would predict that the values in all the righthand cells in figures 6, 7, and 8 would be higher than those in the lefthand cells, since even in monogamous species greater opportunity for male variance in fertility exists than for female (Beecher and Beecher 1979). Hartung focuses upon explaining why Cell B has higher values than he would expect; I would be more interested in the differences between the monogamous societies that do and that do not invest wealth in males. It is worth pointing out that in the corrected *Atlas* sample (fig. 8) the monogamous "no/low" and "high" cells are quite close to a chance 50:50 ratio, but in the Standard Sample (fig. 7) the bias is more strongly toward male inheritance. I would like to see these 9 and 14 samples examined for differences between them. As Hartung and others have pointed out, inheritance is also related to parental certainty (Alexander 1974, Kurland 1979, Hartung 1981*b*), which in itself is related to high male variance in fertility. Do the 9 societies have features which would reduce male fertility variance in addition to monogamy as a mating system?

A subsidiary hypothesis is suggested by Hartung's discussion of bride-price. Inclusive fitness suggests that parents should invest heavily in son's bride-price. What is the relative incidence of bride-price collected primarily by the son, by both son and parents, and primarily by parents? How often is there a discrepancy in resource allocation between sons with different characteristics (such as age)? How does economic discrepancy fit in with other sociological theories such as parental manipulation and parent-child conflict?

Finally, I hope someone follows up on the Oedipal explanation. Hartung suggests that the close mother-son relationship may have an economic base, as both the mother's and the son's interests are served by investment in the son rather than in new wives for the father. A corollary is that mother and son interests would also favor investment of resources in the son rather than in the daughter, since males have greater potential for high fertility variance, especially in polygynous societies. (This, of course, is what is being tested here.) Refutation would occur if polygynous societies could be found in which inheritance was preferably by sons, yet the mother-son bond was not close, or in which mother-daughter bonds were closer than mother-son bonds. It is true that males always have the *potential* for higher fertility variance, but if a society existed in which male variance was low (as is female variance) it would be expected that no bias would exist in inheritance. In this case, mother-son and mother-daughter closeness should be about the same, or possibly daughters would be favored, and Oedipal (or Electra) relationships would not be expected to occur.

I offer these suggestions as new directions, not as criticisms of the present work.

It is heartening to see the recent outpouring of tests of sociobiological hypotheses (Gaulin 1980, Chagnon and Irons 1979, and others cited here), though they are not all without criticisms (Grey and Wolfe 1981). The banquet of hypotheses put forth in 1974 has truly become Alexander's Feast (Alexander 1974).

by JOHN MAYNARD SMITH
School of Biological Sciences, University of Sussex, Brighton BN1 9QG, England. 25 VIII 81

I am not competent to comment on the analysis of the data, but I think Hartung has got the logic of the argument right. In particular, he is right in pointing out that an association between polygyny and transmission of wealth to male descendents could evolve by natural selection, even if there is no relevant genetic variance and the transmission of the habit is entirely cultural. It is only very recently, so far as I know, that this possibility has been recognised explicitly, and Hartung's application of the idea is therefore of special interest.

by WILLIAM D. WILDER
Department of Anthropology, University of Durham, South End House, South Rd., Durham City DH1 3TG, England. 8 IX 81

Hartung's proposition is not refined enough. If professional anthropologists, anthropology majors, or laymen are asked

which forms of polygamy prevail in human societies and which sex tends to control property by inheritance, they will say that *men* control women (one or several per man) and the majority of property and that these tendencies hold for the majority of human societies. Hartung's proposition goes little farther than this; his statistics support the proposition that there exists "a positive relationship between male bias in inheritance and polygyny." His argument purports to show that the link between the two forms of behaviour is "resource-defense" polygyny. Unfortunately, he fails to explain in what way the concept of "resource-defense" polygyny is significant or insightful. Coupled with this vagueness are others: I am at a loss to know what meaningful comparison can be made between father-son incest and mother-son incest. We can even ask what he means by "polygyny" and "wealth." Middle Eastern and African polygynies are functionally quite different institutions, and any study that obscures the meaning of polygyny in the practising societies is not proper anthropology, although respectable statistics it may be. If polygyny is an adaptive or survival strategy, then when did monogamous societies appear and when did adaptation-survival cease to be a problem for human societies? Why do so many continue to practise polygyny? What does Hartung mean by "adaptation"? A proposition that leaves such key points up in the air needs considerably more work, it seems to me, before presentation to a learned audience.

Reply

by JOHN HARTUNG
New York, N.Y., U.S.A. 25 VIII 81

I thank the respondents for their comments. They have caused me to agree with Scott that a new phrase or term should have been coined rather than overextending "resource-defense polygyny"—which has generated more confusion than clarity, even to the point of obscuring the central hypothesis.

References Cited

ALEXANDER, RICHARD D. 1974. The evolution of social behavior. *Annual Review of Ecology and Systematics* 5:325–83. [ECS]

ARBUTHNOTT, J. 1710. An argument for divine providence, taken from the constant regularity observed in the births of both sexes. *Philosophical Transactions* [of the Royal Society, London] 27 for 1710, 1711 and 1712:186–90.

BEALL, C. M., and M. C. GOLDSTEIN. 1981. Tibetan fraternal polyandry: A test of sociobiological theory. *American Anthropologist* 83:5–12.

BEECHER, MICHAEL D., and INGER MORNESTAM BEECHER. 1979. Sociobiology of bank swallows: Reproductive strategy of the male. *Science* 205:1282–85. [ECS]

BORGIA, G. 1979. "Sexual selection and the evolution of mating systems," in *Sexual selection and reproductive competition in insects.* Edited by M. Blum and N. Blum. New York: Academic Press.

BOYD, R., and P. J. RICHERSON. 1980. Sociobiology, culture, and economic theory. *Journal of Economic Behavior and Organization* 1:97–121.

CAVALLI-SFORZA, L. L., and L. M. W. FELDMAN. 1981. *Cultural transmission and evolution: A quantitative approach.* Princeton: Princeton University Press.

CHAGNON, NAPOLEON A., and WILLIAM IRONS. Editors. 1979. *Evolutionary biology and human social behavior: An anthropological perspective.* North Scituate, Mass.: Duxbury Press. [ECS]

CLIGNET, R. 1970. *Many wives, many powers: Authority and power in polygynous families.* Evanston: Northwestern University Press.

DARWIN, C. 1859. *On the origin of species by means of natural selection.* London: John Murray.

———. 1871. *The descent of man and selection in relation to sex.* London: John Murray.

DICKEMANN, M. 1979*a*. "Female infanticide, reproductive strategies, and social stratification: A preliminary model," in *Evolutionary biology and human social behavior.* Edited by N. Chagnon and W. Irons. North Scituate, Mass.: Duxbury Press.

———. 1979*b*. The ecology of mating systems in hypergynous dowry societies. *Social Science Information* 18:163–95. [MD]

———. 1981. "Paternal confidence and dowry competition: A biocultural analysis of purdah," in *Natural selection and social behavior: Recent research and new theory.* Edited by R. D. Alexander and D. W. Tinkle. New York: Chiron Press. [MD]

EMLEN, S. T. 1980. "Ecological determinism and sociobiology," in *Sociobiology: Beyond nature/nurture? Reports, definitions, and debate.* Edited by G. W. Barlow and J. Silverberg. Boulder, Colo.: Westview Press. [MD]

EMLEN, S. T., and L. W. ORING. 1977. Ecology, sexual selection, and the evolution of mating systems. *Science* 197:215–23.

FISHER, R. A. 1930. *The genetical theory of natural selection.* New York: Dover.

FOX, ROBIN. 1967. *Kinship and marriage: An anthropological perspective.* Harmondsworth: Penguin. [UM]

GAULIN, S. J. C. 1980. Sexual dimorphism in the human post-reproductive life-span: Possible causes. *Journal of Human Evolution* 9:227–32. [ECS]

GOODY, J. 1976. *Production and reproduction.* London: Cambridge University Press.

GRAY, J. PATRICK, and LINDA D. WOLFE. 1981. Parental certainty, subsistence, and inheritance revisited. *Journal of Human Evolution* 10:277–80. [ECS]

HAMILTON, W. D. 1964. The genetical evolution of social behaviour. *Journal of Theoretical Biology* 7:1–52.

HARTUNG, J. 1976. On natural selection and the inheritance of wealth. CURRENT ANTHROPOLOGY 17:607–13.

———. 1977. More on natural selection and inheritance. CURRENT ANTHROPOLOGY 18:336.

———. 1980. On the geneticness of traits: Beyond $h^2 = V_g/V_p$. CURRENT ANTHROPOLOGY 21:131–32.

———. 1981*a*. "Genome parliaments and sex with the red queen," in *Natural selection and social behavior: Recent research and new theory.* Edited by R. D. Alexander and D. W. Tinkle, pp. 382–402. New York: Chiron Press.

———. 1981*b*. Paternity and inheritance of wealth. *Nature* 291: 652–54.

HERMAN, J. 1977. Father-daughter incest. *Signs* 2:735–56.

IRONS, W. 1976. Evolutionary biology and human fertility. Paper presented at the Symposium on Sociobiology and Human Social Organization, annual meeting of the American Anthropological Association, Washington, D.C.

———. 1979. "Investment and primary social dyads," in *Evolutionary biology and human social behavior.* Edited by N. Chagnon and W. Irons. North Scituate, Mass.: Duxbury Press.

———. 1980. "Is Yomut social behavior adaptive?" in *Sociobiology: Beyond nature/nurture? Reports, definitions, and debate.* Edited by G. W. Barlow and J. Silverberg. Boulder, Colo.: Westview Press.

KURLAND, JEFFREY A. 1979. "Paternity, mother's brother, and human sociality." in *Evolutionary biology and human social behavior: An anthropological perspective.* Edited by Napoleon A. Chagnon and William Irons, pp. 145–80. North Scituate, Mass.: Duxbury Press.

LUMSDEN, C. J., and E. O. WILSON. 1981. *Genes, mind, and culture: The coevolutionary process.* Cambridge: Belknap/Harvard Press.

MELOTTI, UMBERTO. 1979. *L'uomo tra natura e storia: La dialettica delle origini.* Milano: Centro Studi Terzo Mondo. [UM]

———. 1981*a*. *Oltre la sociobiologia: Per una nuova scienza unitaria dell'uomo e della società.* Milano: Centro Studi Terzo Mondo. [UM]

———. 1981*b*. Towards a new theory of the origin of the family. CURRENT ANTHROPOLOGY 22:625–38. [UM]

MURDOCK, G. P. 1949. *Social structure.* New York: Macmillan.

———. 1957. World ethnographic sample. *American Anthropologist* 59:664–87.

———. 1967. *Ethnographic atlas.* Pittsburgh: University of Pittsburgh Press.

MURDOCK, G. P., and D. R. WHITE. 1969. The standard cross-cultural sample. *Ethnology* 8:329–69.

ORIANS, G. H. 1969. On the evolution of mating systems in birds and mammals. *American Naturalist* 103:589–603.

PLESZCZYNSKA, W. K. 1978. Microgeographic prediction of polygyny in the lark bunting. *Science* 201:935–38.

POSPISIL, LEOPOLD. 1954. Laws of inheritance and kinship terminology. MS.

PULLIAM, R., and C. DUNFORD. 1980. *Program to learn: An essay on evolution of culture*. New York: Columbia University Press.
SUMNER, W. G., and A. KELLER. 1927. *The science of society*. New Haven: Yale University Press.
TEXTOR, R. B. 1966. *A cross-cultural summary*. New Haven: HRAF Press.
TOMBERLIN, T. J., P. J. GREEVE, and J. HARTUNG. 1981. A correction for diffusion. Paper presented at the annual meeting of the American Statistical Association, Detroit, August.
TRIVERS, R. L. 1974. Parent-offspring conflict. *American Zoologist* 14:249–64. [ECS]
VERNER, J., and M. F. WILLSON. 1966. The influence of habitats on mating systems of North American passerine birds. *Ecology* 47:143–47.
WHITING, J. 1981. "Environmental constraints on infant care practices," in *Handbook of cross-cultural human development*. Edited by R. L. Munroe, R. M. Munroe, and B. B. Whiting. New York: Garland.

Institutions

■ The catalogue of the Tozzer Library (formerly Peabody Museum Library) has long served anthropologists by providing the most comprehensive bibliography of anthropological materials anywhere in the world. Published compilations of entries from the catalogue are available in the *Catalogue of the Tozzer Library of the Peabody Museum of Archaeology and Ethnology* and its four supplements and in the quarterly journal *Anthropological Literature*. The catalogue now constitutes a data base of more than 500,000 entries, and each year some 50,000 entries are added.

The unique features of the Tozzer Library catalogue, especially the inclusion of articles from serials and books and the classification of materials by detailed anthropological subject headings, are very costly to produce. They occupy the time of one-quarter of the library's staff. Within the last two decades, Harvard University has repeatedly questioned the feasibility of continuing to support the indexing system by which articles are added to the catalogue. Unless a firm financial foundation for the index is provided in the near future, discontinuation is a real possibility.

To provide such a foundation, a decision has been made to raise money for an endowment for the index. A minimum of $500,000 is needed. Anthropologists and anthropological institutions are asked to show their support for the Tozzer Library indexing system by making a contribution to the endowment fund. Contributions should be sent to Nancy J. Schmidt, Librarian of Tozzer Library, 21 Divinity Ave., Cambridge, Mass. 02138, U.S.A.

■ As part of its 75th anniversary celebrations, the University of Alberta will hold a symposium on human evolution October 4–5, 1982. Among the participants in the symposium will be Glynn Isaac (Berkeley), Mary Leakey (Nairobi), Wu Ru-kang (Beijing), Teuku Jacob (Yogyakarta), and Phillip Tobias (Johannesburg).

■ The Administrative Council of the International Society of European Ethnology and Folklore has chosen Moscow as the site of the Society's 2d Congress, September 30–October 6, 1982. The Organizing Committee in Moscow plans ten symposia, each headed by a convener/chairman who will be responsible for inviting a maximum of 15 scholars from around the world to take part. Participants will be expected to exchange papers among themselves well before the congress in order to save the actual meeting time for discussion and formulation of conclusions. Applications and abstracts should be sent to the conveners at the Institute of Ethnology, Academy of Sciences of the U.S.S.R., Dm. Ulianov 19, 117036 Moscow, U.S.S.R. The symposia and their conveners are as follows:

1. Stability and change in culture systems of European countries today (K. V. Chistov).
2. Urban ethnography: Individual studies, problems, and methods (M. G. Rabinovich).
3. Local and regional communities of Europe: The general and the particular (N. N. Gratsianskaya).
4. Ethnocultural and ethnodemographic processes in postwar Europe (P. I. Pouchkov).
5. Ethnological Atlas of Europe and Adjacent Countries (S. I. Brook).
6. Interaction between cultures of Europe and of the other continents (L. E. Kubbel).
7. Calendar and family rites (V. K. Sokolova).
8. Ethnology: General problems (A. I. Pershitz).
9. Ethnogenesis and ethnic history of Europe, as based on the materials of ethnography and folklore (N. A. Krasnovskaya).
10. Contemporary folklore of European peoples: Its forms and conditions of existence (B. N. Putilov).